City of Fayetteville North Carolina

HISTORIC RESOURCES COMMISSION STAFF REPORT

COA NUMBER: 20-015

HISTORIC RESOURCES COMMISSION HEARING DATE: July 28, 2020

APPLICANT/OWNER: Crown Castle Fiber LLC fka Fiber Technologies Network, LLC
300 Meridian Centre Blvd, Suite 200
Rochester, NY, 14618

STAFF: Jennifer C Baptiste, CFM

PROPOSAL AND REQUESTED ACTION:
The applicant is requesting a Certificate of Appropriateness (COA) to place a new 46-foot black concrete utility pole with attached wireless telecommunications equipment at the site.

SITE LOCATION:
The poles will be located in the right-of-way near 383 Franklin Street. (no tax ids available).

HISTORIC DESIGNATION:

Downtown Historic District

BACKGROUND INFORMATION:

Downtown Historic District

The Downtown Historic District encompasses the original commercial center of the city. The historic, architectural, and archaeological resources of the district are significant for the information they possess relative to the settlement pattern and the urban development of Fayetteville. The period of significance covers the late 18th century to the mid-20th century.

Fayetteville's earliest settlement, the commercial district, developed as an important regional trade center in the Upper Cape Fear River Valley in eastern North Carolina. The architecture of the commercial buildings reflects this development and ranges from the brick Federal-style Liberty Row shops on Person Street to the early 20th century Dutch Colonial Revival, Mediterranean Revival and Neo-Classical Revival buildings. These buildings share common walls, of durable materials such as brick, ashlar veneer, and/or steel. Lots are typically 20 to 40 feet wide and 80 to 100 feet deep with buildings located adjacent to public sidewalks.

The Downtown Historic District, listed locally as well as on the National Register of Historic Places, includes two additional National Register Historic Districts; the Market House Square Historic District, and the Liberty Row Historic District. The Historic District's focal point is the brick Market House, constructed in 1832, a National Historic Landmark, modeled after an 18th century English town hall.

New Construction

New construction within a historic district can positively contribute to the evolution of the district provided the design is compatible with the district's significant characteristics. New architecture and development provides a continuum of the architectural evolution that began in Fayetteville over two centuries ago. An understanding of the impact new construction has on historic districts is essential prior to planning a new construction project.

In historically commercial districts, consideration for new construction include building material, size, scale, design, detail, setback, placement, style, and paving patterns.

SCOPE OF WORK SUMMARY:

Factors

The applicant proposes to place a new 46-foot black PWC concrete pole with attached wireless telecommunications equipment.

Findings

This application is requesting a Certificate of Appropriateness for a site in the Downtown area, near 383 Franklin Street. This will be a new small cellular antenna and will not replace any of the existing streetlight poles at this location. Currently, there are several antennas located along the roadway. These poles will remain and the new antenna will be located adjacent to the existing poles.

In addition to the installation of the new pole, an electric meter pedestal will be installed at the base of the fixture. The pole and all telecommunication components will be painted black to match the removed pole and the surrounding poles.

Small cell antennas must meet the application criteria of the Telecommunications Facilities section of the Unified Development Ordinance, Section 30-4.C.3.i. The application will be submitted through the Public Services Department for approval or denial.

Applicable Design Guidelines

New Construction

- Consult with the Fayetteville Historic Resources Commission and the City Planning Department in the early planning phases of a new construction project.
- New construction should not compromise the topography and site features, such as mature trees, nor should it block or obscure views and vistas.
- Materials used in new construction should be compatible with the scale, pattern, detail, finish, composition, and color of historic building materials in the historic district.

STAFF RECOMMENDATION:

Staff is recommending approval as the project meets all of the criteria in the Design Guidelines. It does not detract from or create an incongruity in the area.

ATTACHMENTS:

- Application
- Site Photograph
- Proposed Pole Profiles

Planning & Zoning
433 Hay Street
Fayetteville, NC 28301
910-433-1612
www.fayettevillenc.gov

Project Overview

#391219

Project Title: SC-NC 0448 383 Franklin St
Application Type: 6.1) Certificate of Appropriateness
Workflow: Minor Work

Jurisdiction: City of Fayetteville
State: NC
County: Cumberland

Project Location

Project Address or PIN: 383 FRANKLIN ST (Unverified)

GIS Verified Data

Property Owner:
Zoning District:
Fire District:
Hospital Overlay District:
Cape Fear District:
Haymount Historic District:
100 Year Flood:
Watershed:

Acreage:
Subdivision Name:
Airport Overlay District:
Coliseum Tourism District:
Downtown Historic District:
Floodway:
500 Year Flood:

Project Data

Was a pre-application conference conducted?: No
Project Type: Historic District
Describe in your own words all exterior work, buildings, and construction that can be seen from the public right-of-way. Be sure to indicate all exterior materials and colors. You may upload additional sheets and attach manufacturer's information where appropriate.: Crown Castle is proposing to place a new 46' black concrete utility pole and attach small cell wireless equipment to new pole per node package.

Date of Pre-Application Conference:
Exterior Work Type: New Construction

Primary Contact Information

Project Contact - Agent/Representative
Renee Guider
Crown Castle
4545 East River Road, 320
West Henrietta, NY 14586
P:5854455896
Renee.Guider@crowncastle.com

Project Owner
Renee Guider
Crown Castle
4545 East River Road, 320
West Henrietta, NY 14586
P:5854455896
Renee.Guider@crowncastle.com

Indicate which of the following project contacts should be included on this project: Engineer

NC State License Number:

As an unlicensed contractor, I am aware that I cannot enter into a contract that the total amount of the project exceeds $30,000. :

Project Contact - Primary Point of Contact for Engineer

George Sipek
Crown Castle Fiber, LLC
100 Regency Foret Dr, 300
Cary, NC 27518
P:919-234-9979
George.Sipek@crowncastle.com

City of Fayetteville North Carolina

Subject Property

DocuSign Envelope ID: 778918B9-1874-41AC-AEE4-E8C33E424250

FAYETTEVILLE, NC - CONCRETE POLE

CROWN CASTLE USA INC.
SCU #: 494325
NODE #: SC-NC 0448
ADDRESS: 383 FRANKLIN ST
FAYETTEVILLE, NC 28301
JURISDICTION: CITY OF FAYETTEVILLE

CROWN CASTLE PROJECT TEAM

TEAM MEMBER'S REVIEW	REVIEWED	DATE
RF ENGINEERING	---	07/30/2019
PRODUCT MANAGEMENT	---	07/30/2019
NETWORK REAL ESTATE	---	07/30/2019
UTILITY TEAM	---	07/30/2019
IMPLEMENTATION	---	07/30/2019
OPERATIONS	---	07/30/2019

CROWN CASTLE
1500 CORPORATE DRIVE
CANONSBURG, PA 15317

SCU #:
494325

NODE #:
SC-NC 0448

A&E PROJECT #:
NEW POLE SET

PROJECT NAME:
FAYETTEVILLE, NC

ADDRESS:
383 FRANKLIN ST
FAYETTEVILLE, NC 28301

SITE INFORMATION/CONTACTS

SITE ADDRESS:	383 FRANKLIN ST FAYETTEVILLE, NC 28301
COUNTY:	CUMBERLAND
AREA OF CONSTRUCTION:	NEW
LATITUDE:	35.052511
LONGITUDE:	-78.882792
JURISDICTION:	CITY OF FAYETTEVILLE
OCCUPANCY CLASSIFICATION:	U
TYPE OF CONSTRUCTION:	IIB
A.D.A. COMPLIANCE:	FACILITY IS UNMANNED AND NOT FOR HUMAN HABITATION, HOWEVER ALL SITE CONDITIONS MEET ADA REQUIREMENTS.
POLE OWNER:	CROWN CASTLE (855) 933-4237
UTILITY:	FAYETTEVILLE PUBLIC WORKS COMMISSION (PWC) (910) 483-1382
PROJECT MANAGER:	MICHELE TURNER (585) 568-8423
CONSTRUCTION MANAGER:	WILLIAM GREENWELL (919) 249-9214,
SR. PERMIT ADMINISTRATOR:	RENEE GUIDER (585) 697-5193

LOCATION MAP

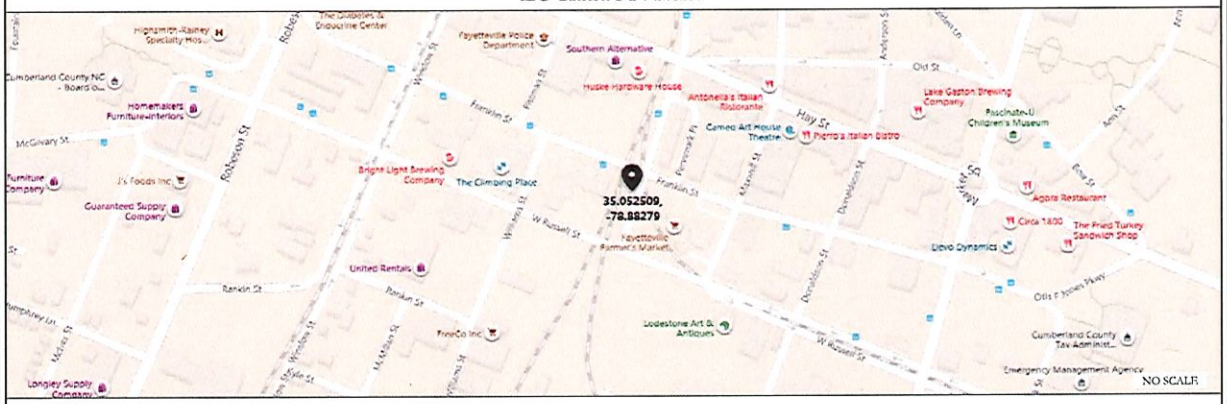

ISSUED FOR:

REV	DATE	DRWN	DESCRIPTION	DES./QA
A	3/20/2020	ZTK	PRELIMINARY	GS
B	4/9/2020	ZTK	PRELIMINARY	GS
0	4/20/2020	ZTK	CONSTRUCTION	AJF

TITLE SHEET

NOTES

1. ALL DRAWINGS CONTAINED HEREIN ARE FORMATTED FOR 11X17. CONTRACTOR SHALL VERIFY ALL PLANS AND EXISTING DIMENSIONS AND CONDITIONS ON THE JOB SITE AND SHALL IMMEDIATELY NOTIFY THE ENGINEER IN WRITING OF ANY DISCREPANCIES BEFORE PROCEEDING WITH THE WORK OR BE RESPONSIBLE FOR SAME.
2. PRIOR TO ACCESSING/ENTERING THE SITE YOU MUST CONTACT THE CROWN CASTLE SMALL CELL NOC AT (888) 632-0931 & CROWN CASTLE CONSTRUCTION MANAGER.

CALL NORTH CAROLINA ONE CALL
(800) 632-4949
CALL 3 WORKING DAYS
BEFORE YOU DIG!

DRAWING INDEX

SHEET #	SHEET DESCRIPTION
T-1	TITLE SHEET
T-2	GENERAL NOTES
T-3	GENERAL NOTES
C-1	SITE PLAN
C-2	PROPOSED POLE DETAILS
C-3	BILL OF MATERIALS
C-4	EQUIPMENT SPECS
C-5	FIBER RISER DIAGRAM & RF SIGNAGE DETAILS
E-1	ELECTRICAL PANEL, SPEC, SCHEDULE & SCHEMATIC
G-1	GROUNDING RISER DIAGRAM
P-1	PHOTO SIMULATION

CODES/REFERENCES

ALL WORK SHALL BE PERFORMED AND MATERIALS INSTALLED IN ACCORDANCE WITH THE CURRENT EDITIONS OF THE FOLLOWING CODES AS ADOPTED BY THE LOCAL GOVERNING AUTHORITIES. NOTHING IN THESE PLANS IS TO BE CONSTRUED TO PERMIT WORK NOT CONFORMING TO THESE CODES:

CODE TYPE	CODE
BUILDING	2018 NC BUILDING CODES/2015 IBC W/ AMENDMENTS
MECHANICAL	2018 NC MECHANICAL CODES/2015 IMC W/ AMENDMENTS
ELECTRICAL	2017 NC ELECTRICAL CODES/2017 NEC W/ AMENDMENTS

REFERENCE DOCUMENTS:
STRUCTURAL DESIGN: NETWORK BUILDING + CONSULTING, LLC

NOTE:
THIS MAP MAY NOT BE A CERTIFIED SURVEY AND HAS NOT BEEN REVIEWED BY A LOCAL GOVERNMENT AGENCY FOR COMPLIANCE WITH ANY APPLICABLE LAND DEVELOPMENT REGULATIONS AND HAS NOT BEEN REVIEWED FOR COMPLIANCE WITH RECORDING REQUIREMENTS FOR PLATS.

DocuSigned by:
Andrew Fandozzi
BAD6060DB9A4...

NORTH CAROLINA PROFESSIONAL SEAL 042222 ENGINEER ANDREW JOSEPH FANDOZZI III

Crown Castle USA Inc. Business License #ID-0430

4/20/2020 | 8:19:25 AM EDT

IT IS A VIOLATION OF LAW FOR ANY PERSON, UNLESS THEY ARE ACTING UNDER THE DIRECTION OF A LICENSED PROFESSIONAL ENGINEER, TO ALTER THIS DOCUMENT.

SHEET NUMBER: T-1
REVISION: 0

DocuSign Envelope ID: 778918B9-1874-41AC-AEE4-E8C33E424250

GENERAL PLAN NOTES:

1. THE CONTRACTOR SHALL BE PREPARED TO REPAIR/REPLACE ANY WORK DEEMED TO BE SUBSTANDARD OR ONE WITHOUT INSPECTION SIGN-OFF BY THE GOVERNING DIVISION OF ENGINEERING AND CONSTRUCTION.

2. STREET OPENING PERMIT FOR RIGHT OF WAY CONSTRUCTION

   DEFINITION:
   ANY CONSTRUCTION IN THE PUBLIC RIGHT-OF-WAY FOR THE PURPOSES OF INSTALLING NEW OR REPAIRING/UPGRADING EXISTING PRIVATE AND PUBLIC FACILITIES SHALL BE GOVERNED BY THE REQUIREMENTS OF THIS PERMIT. THE STREET OPENING PERMIT IS REQUIRED FOR THE REMOVAL OR REPLACEMENT OF ANY AND ALL EXISTING CITY INFRASTRUCTURE, INCLUDING ROADWAYS, SIDEWALKS, CURB, ADA RAMPS, TRAFFIC SIGNALIZATION AND APPURTENANCES, PUBLIC OWNED SEWER, WATER AND ELECTRICAL UTILITIES NECESSARY FOR THE PURPOSES OF CONSTRUCTION OR DAMAGED DURING CONSTRUCTION. PRIOR TO MEETING THE REQUIREMENTS AND ACQUIRING THIS PERMIT, THE CONTRACTOR DOES NOT HAVE THE PERMISSION TO REMOVE AND/OR REPLACE ANY PORTION OF SAID "INFRASTRUCTURE". A SIDEWALK PERMIT IS REQUIRED FOR THE REPAIR AND REPLACEMENT OF EXISTING SIDEWALKS, APRONS, CURBING, AND ADA RAMPS.

3. NO OBSTRUCTIONS SHALL BE PLACED IN FRONT OR INTERFERE WITH ANY FIRE HYDRANT OR FIRE ALARM BOX.

4. INTERSECTION CROSSOVERS MUST BE SQUARED OFF AND MAY INCLUDE GRINDING AND RESURFACING OF THE ENTIRE INTERSECTION.

5. ADA COMPLIANT CURB RAMPS SHALL BE CONSTRUCTED AT INTERSECTIONS ADJACENT TO ROADWAY AND SIDEWALK PAVEMENT RESTORATION WORK AND AS PER THE DIRECTION OF THE COMMISSIONER OF ENGINEERING AND CONSTRUCTION.

6. CONTRACTOR MUST COORDINATE FOR CITY INSPECTION OF CONSTRUCTION, INCLUDING RESTORATION WORK AND BACKFILLING, AT LEAST 5 BUSINESS DAYS IN ADVANCE.

7. PRIVATE/PUBLIC UTILITIES AND TRAFFIC SIGNALS:
   CARE SHALL BE TAKEN TO NOT DAMAGE UNDERGROUND UTILITIES, INCLUDING BURIED TRAFFIC SIGNAL EQUIPMENT, AND HAND DIGGING SHALL BE UTILIZED WHERE NECESSARY TO PREVENT DAMAGE TO UNDERGROUND UTILITIES.

8. THE CONTRACTOR IS RESPONSIBLE FOR CONTACTING, DIGSAFE, 811, MISS DIG OR OUPS, AND OTHER UTILITY COMPANIES, AT LEAST 48 HOURS BEFORE DIGGING.

9. DIRECTION DRILLING/BORING RESTRICTIONS:
   DIRECTIONAL DRILLING AND/OR BORING IS NOT PERMITTED WITHOUT SPECIAL APPROVAL FROM THE LOCAL AUTHORITIES.

10. AS-BUILT DRAWING REQUIREMENTS:
    AS-BUILT DRAWINGS WILL BE SUBMITTED TO CROWN CASTLE AND THE ENGINEER.

11. SIDEWALK AND OBSTRUCTION PERMITS
    ALL REPAIRS ARE TO BE PERFORMED PER THE LOCAL CITY STANDARDS AND DETAIL DRAWINGS WHICH WILL BE PROVIDED WITH THE SIDEWALK PERMIT OR UPON REQUEST.

12. CITY STANDARDS SIDEWALK, DRIVEWAY AND APRON REPAIRS
    SIDEWALK, DRIVE WALK AND APRON REPLACEMENTS ARE TO BE DONE IN CONCRETE WITH AN AIR ENTRAINED CONCRETE MIX THAT HAS A MINIMUM OF 650 LBS. CEMENT PER CUBIC YARD. FULL SLAB REPAIRS ARE REQUIRED, JOINT-TO-JOINT WITH A BROOM FINISH AND TO LOCAL CODE SPECIFICATIONS. CONCRETE SHALL BE PLACED ON COMPACTED 2" THICK BASE OF SAND OR GRAVEL. PREMIUM FILL MATERIAL SHALL BE PLACED AND COMPACTED IN LIFTS OF 6 INCHES AT ALL AREAS UNDER THE SIDEWALK THAT THE SUB GRADE HAS BEEN EXCAVATED. NEW BRICK, CONCRETE OR GRANITE PAVERS MUST HAVE APPROVAL PRIOR TO INSTALLATION. FULL SANDSTONE SLABS MAY BE RELAYED/RESET IF NOT BROKEN OR IF THE SURFACE IS DISHED OR WORN SMOOTH. ALL SIDEWALK REPAIRS IN THE CENTRAL BUSINESS DISTRICT MUST BE 6-INCH THICKNESS. SIDEWALK REPAIRS IN RESIDENTIAL AREAS ARE TO BE 4-INCH THICKNESS AND ALL RESIDENTIAL DRIVEWAYS AND APRONS ARE TO BE 6-INCH THICKNESS. AT ALL CHANGES IN SLAB THICKNESS, 1/2" THICK EXPANSION JOINT MATERIAL SHALL BE PLACED AND ALSO AT MINIMUM OF 30' INTERVALS. ALL AREAS OF NEW CONSTRUCTION SHALL BE PROTECTED AND BARRICADED UNTIL THE AREA CAN BE OPENED TO PEDESTRIAN OR VEHICLE TRAFFIC WITHOUT DAMAGE. ALSO, REFER TO LOCAL JURISDICTION SPECIFICATIONS.

13. CURB REPAIRS
    MAY BE CONCRETE OR IN KIND MATERIAL; THIS VARIES IN WHICH CITY DISTRICT THE REPAIRS ARE TO BE MADE.

14. THE PLAN SHOWS SOME SUBSURFACE STRUCTURES, ABOVE-GROUND STRUCTURES AND/OR OTHER FEATURES FROM FIELD MEASUREMENTS AND RECORD MAPPING, EXACT LOCATION OF WHICH MAY VARY FROM THE LOCATION INDICATED. IN PARTICULAR THE CONTRACTOR IS WARNED THAT THE EXACT LOCATION OF SUCH EXISTING FEATURES IN THE AREA MAY BE DIFFERENT FROM THAT SHOWN OR MAY NOT BE SHOWN, AND IT SHALL BE THE CONTRACTORS RESPONSIBILITY TO PROCEED WITH THE GREATEST CARE IN EXECUTING ANY WORK.

15. CONTRACTOR SHALL CONTACT A SUBSURFACE UTILITY LOCATOR FOR LOCATION OF EXISTING UTILITIES PRIOR TO COMMENCEMENT OF ANY CONSTRUCTION ACTIVITIES. CONTRACTOR SHALL VERIFY EXISTING UTILITY LOCATIONS BY TEST PIT AS NECESSARY. LOCATION OF UTILITIES SHOWN ON THIS PLAN ARE APPROXIMATE AND FOR PLANNING PURPOSES ONLY.

16. THE LOCATIONS OF EXISTING UNDERGROUND UTILITIES ARE SHOWN IN AN APPROXIMATE WAY ONLY AND HAVE NOT BEEN INDEPENDENTLY VERIFIED BY THE OWNER OR ITS REPRESENTATIVE. THE CONTRACTOR SHALL DETERMINE THE EXACT LOCATION OF ALL EXISTING UTILITIES BEFORE COMMENCING WORK AND AGREES TO BE FULLY RESPONSIBLE FOR ANY AND ALL DAMAGES WHICH MIGHT BE OCCASIONED BY THE CONTRACTOR FAILURE TO EXACTLY LOCATE AND PRESERVE ANY AND ALL UNDERGROUND UTILITIES.

17. THE ENGINEER SHALL BE NOTIFIED IN WRITING OF ANY CONDITIONS THAT VARY FROM THOSE SHOWN ON THE PLANS. THE CONTRACTORS WORK SHALL NOT VARY FROM THE PLANS WITHOUT THE EXPRESSED APPROVAL OF THE ENGINEER.

18. WORK SHALL COMPLY WITH CURRENT ISSUES OF ALL APPLICABLE STATE AND LOCAL CODES, ORDINANCES, AND REGULATIONS, THE LATEST EDITION THEREOF.

19. CONTRACTOR SHALL SECURE ALL NECESSARY PERMITS FOR THIS PROJECT FROM ALL APPLICABLE GOVERNMENTAL AGENCIES. THE RIGHT OF WAY PERMIT HAS BEEN APPLIED FOR BY CROWN CASTLE AND WILL BE PICKED UP BY THE CONTRACTOR AT THE PERMITS OFFICE.

20. ANY PERMITS WHICH MUST BE OBTAINED SHALL BE THE CONTRACTOR'S RESPONSIBILITY. THE CONTRACTOR SHALL BE RESPONSIBLE FOR ABIDING BY ALL CONDITIONS AND REQUIREMENTS OF THE PERMITS.

21. THE ENGINEER HAS NOT CONDUCTED, NOR DOES IT INTEND TO CONDUCT ANY INVESTIGATION TO DETERMINE THE PRESENCE OF ANY HAZARDOUS MATERIAL INCLUDING BUT NOT LIMITED TO ASBESTOS, LEAD PAINT, AND PCB'S WITHIN THE CONFINES OF THIS PROJECT. THE ENGINEER WILL NOT ACCEPT ANY RESPONSIBILITY FOR THE ABATEMENT OR RESULTING CLAIMS FOR DAMAGES OR LOSSES AS A RESULT OF THE PRESENCE OF HAZARDOUS MATERIALS. IF EVIDENCE OF HAZARDOUS MATERIALS IS DISCOVERED, SUSPEND WORK AS REQUIRED BY GOVERNING STATUTES, AND NOTIFY CROWN CASTLE REPRESENTATIVE. DO NOT PROCEED WITH WORK UNTIL INSTRUCTED BY CROWN CASTLE REPRESENTATIVE.

22. ALL MATERIAL FURNISHED UNDER THIS CONTRACT SHALL BE NEW UNLESS OTHERWISE NOTED. ALL WORK SHALL BE GUARANTEED AGAINST DEFECTS IN MATERIAL AND WORKMANSHIP FOR A PERIOD OF TWELVE MONTHS FOLLOWING SUBSTANTIAL COMPLETION OF PROJECT OR AS SPECIFIED. THE CONTRACTOR SHALL REPAIR OR REPLACE AT HIS EXPENSE ALL WORK THAT MAY DEVELOP DEFECTS IN MATERIALS OR WORKMANSHIP WITHIN THE WARRANTY PERIOD.

23. THE GENERAL CONTRACTOR AND EACH SUBCONTRACTOR ARE TO BE RESPONSIBLE FOR VERIFYING EXISTING SITE CONDITIONS, DIMENSIONS, AND THE LOCATION OF BURIED UTILITIES AT THE JOB SITE PRIOR TO THE COMMENCEMENT OF WORK. NO CLAIMS FOR EXTRA COMPENSATION FOR WORK RESULTING FROM CONFLICTS AND OMISSIONS WHICH COULD HAVE BEEN DISCOVERED BY FIELD VERIFICATION AND INSPECTION, WHETHER INDICATED IN THE CONTRACT DOCUMENTS OR NOT WILL BE ENTERTAINED OR PAID.

24. SITE CONDITIONS, DIMENSIONS, AND THE LOCATION OF BURIED UTILITIES AT THE JOB SITE PRIOR TO THE COMMENCEMENT OF WORK. NO CLAIMS FOR EXTRA COMPENSATION FOR WORK RESULTING FROM CONFLICTS AND OMISSIONS WHICH COULD HAVE BEEN DISCOVERED BY FIELD VERIFICATION AND INSPECTION, WHETHER INDICATED IN THE CONTRACT DOCUMENTS OR NOT WILL BE ENTERTAINED OR PAID.

25. FOLLOW MANUFACTURERS' PRINTED SPECIFICATION AND INSTRUCTIONS EXCEPT WHERE SPECIFIED OR INDICATED ON CONTRACT DOCUMENTS. COMPLY WITH THE MOST STRINGENT INSTRUCTIONS.

26. THE CONTRACTOR SHALL VERIFY AND COORDINATE SIZE AND LOCATION OF ALL OPENINGS FOR STRUCTURAL, MECHANICAL, ELECTRICAL, PLUMBING, CIVIL, AND/OR ARCHITECTURAL WORK.

27. THE CONTRACTOR SHALL VERIFY THAT THERE ARE NO CONFLICTS AMONG THE LOCATIONS OF ANY MECHANICAL, ELECTRICAL, PLUMBING, OR STRUCTURAL ELEMENTS AND THAT ALL REQUIRED CLEARANCES AND CONSTRUCTIONS TOLERANCES FOR INSTALLATION AND MAINTENANCE ARE PROVIDED. NOTIFY CROWN CASTLE REPRESENTATIVE OF ANY CONFLICTS. CROWN CASTLE REPRESENTATIVE RESERVES THE RIGHT TO MAKE MINOR MODIFICATIONS TO THE DESIGN WITHOUT ALTERING THE CONTRACT PRICE.

28. DO NOT SCALE DRAWINGS. DIMENSIONS ARE EITHER TO THE FACE OF FINISHED ELEMENTS OR TO THE CENTERLINE OF ELEMENTS, UNLESS NOTED OTHERWISE. CRITICAL DIMENSIONS SHALL BE CONFIRMED WITH SITE MEASUREMENTS. VERIFY WITH THE CUSTOMER'S REPRESENTATIVE AS APPLICABLE.

29. THE CONTRACTOR IS RESPONSIBLE FOR DAILY CLEANUP OF THE SITE AND REMOVAL AND DISPOSAL OF ALL CONSTRUCTION DEBRIS. AT COMPLETION OF THE PROJECT THE CONTRACTOR SHALL THOROUGHLY CLEAN THE SITE AND ANY OTHER SURROUNDING AREAS TO THE SATISFACTION OF CROWN CASTLE AND THE LANDLORD.

30. THE CONTRACTOR IS RESPONSIBLE FOR ADEQUATELY BRACING AND PROTECTING ALL WORK DURING CONSTRUCTION, AGAINST DAMAGE, BREAKAGE, COLLAPSE, ETC. ACCORDING TO APPLICABLE CODES, STANDARDS, AND GOOD CONSTRUCTION PRACTICES.

31. ALL WORK SHALL BE DONE IN STRICT COMPLIANCE WITH ALL APPLICABLE NATIONAL (OSHA), STATE AND LOCAL CODES, STANDARDS, ORDINANCES, RULES AND REGULATIONS.

32. THE CONTRACTOR SHALL BE HELD RESPONSIBLE FOR DAMAGES TO THE EXISTING FACILITY AND INSTILLATION RESULTING FROM CONSTRUCTION AND GENERAL NEGLIGENCE. REPAIR ALL DAMAGES AND RESTORE FACILITY AND INSTALLATIONS TO THE SATISFACTION OF CROWN CASTLE AND LANDLORD AT NO EXTRA CHARGE. NOTIFY THE CUSTOMER'S REPRESENTATIVE AND TOWER OWNER OF ANY SUCH DAMAGES PROMPTLY. REPAIR TO 100% SATISFACTION IMMEDIATELY.

33. WHERE ONE DETAIL IS SHOWN FOR ONE CONDITION, UNLESS NOTED OTHERWISE, IT SHALL APPLY FOR ALL LIKE OR SIMILAR CONDITIONS, EVEN THOUGH NOT SPECIFICALLY MARKED IN THE DRAWINGS.

34. THE CUSTOMER'S REPRESENTATIVE IS RESPONSIBLE FOR APPLYING FOR COMMERCIAL POWER CONNECTION. CONTRACTOR IS RESPONSIBLE FOR COORDINATION OF UTILITY INSPECTIONS AND POWER COMPANY INSTALLATION. THE GENERAL CONTRACTOR IS REQUIRED TO KEEP ALL DOCUMENTATION RECEIVED FROM THE POWER COMPANY, WRITTEN AND VERBAL DISCUSSIONS WITH THE POWER COMPANY ETC.

35. THE CUSTOMER'S REPRESENTATIVE SHALL OBTAIN WRITTEN CONFIRMATION OF THE EXPECTED DATE OF COMPLETION OF THE POWER CONNECTION FROM THE POWER COMPANY. CONTRACTOR WILL PROVIDE TEMPORARY POWER FOR CONSTRUCTION. GENERAL CONTRACTOR AND HIS SUBCONTRACTORS ARE NOT ALLOWED TO CONNECT TO ANY EXISTING UTILITIES ON THE SITE.

36. DRAWINGS FORMING THIS SET ARE COMPLIMENTARY AND MUST BE READ AS ONE TOTAL DOCUMENT. DRAWINGS AND SPECIFICATIONS ARE THE PROPERTY OF CROWN CASTLE. THESE DRAWING WERE PREPARED TO SUBMITTED TO GOVERNMENTAL BUILDING AUTHORITIES FOR REVIEW FOR COMPLIANCE WITH APPLICABLE BUILDING CODES. IT IS THE SOLE RESPONSIBILITY OF THE CONTRACTOR TO EXECUTE CONSTRUCTION INDICATED HEREIN ACCORDING TO APPLICABLE BUILDING CODES.

37. THESE CONSTRUCTION DOCUMENTS AND SPECIFICATIONS SHALL BE INTERPRETED TO BE A MINIMUM ACCEPTABLE STANDARD FOR CONSTRUCTION. THESE DOCUMENTS SHALL NOT RELIEVE THE CONTRACTOR, SUBCONTRACTOR, AND/OR SUPPLIER/MANUFACTURER FROM PROVIDING A COMPLETE AND CORRECT INSTILLATION SHOULD ADDITIONAL ITEMS AND DETAILS BE REQUIRED FOR PROPER AND SAFE INSTILLATION.

38. THESE CONTRACT DOCUMENTS AND SPECIFICATIONS DO NOT CREATE A CONTRACTUAL RELATIONSHIP OF ANY KIND BETWEEN THE CROWN CASTLE REPRESENTATIVE AND THE CONTRACTOR.

39. THE SCOPE OF WORK SHALL INCLUDE FURNISHING ALL MATERIALS, EQUIPMENT, AND LABOR DEEMED NECESSARY TO COMPLETE THE WORK/PROJECT DESCRIBED HEREIN.

40. THE CONTRACTOR SHALL OBTAIN AUTHORIZATION FROM THE CROWN CASTLE REPRESENTATIVE TO PROCEED WITH CONSTRUCTION PRIOR TO STARTING WORK ON ANY ITEM NOT CLEARLY DEFINED BY THE CONSTRUCTION DRAWINGS/CONTRACT DOCUMENTS.

41. THE CONTRACTOR SHALL SUPERVISE AND DIRECT THE PROJECT DESCRIBED HEREIN. THE CONTRACTOR SHALL BE SOLELY RESPONSIBLE FOR ALL THE CONSTRUCTION MEANS, METHODS, TECHNIQUES, SEQUENCES, PROCEDURES, AND FOR COORDINATING ALL PORTIONS OF THE WORK UNDER CONTRACT.

42. THE CONTRACTOR SHALL MAKE NECESSARY PROVISIONS TO PROJECT AND MAINTAIN EXISTING CONDITIONS, EASEMENTS, PAVEMENTS, CURBING, ETC. DURING CONSTRUCTION. UPON COMPLETION OF WORK, THE CONTRACTOR SHALL REPAIR ANY DAMAGE THAT MAY HAVE OCCURRED DUE TO CONSTRUCTION ON OR ABOUT THE PROPERTY.

43. THE CONTRACTOR SHALL MAINTAIN ALL TRAFFIC IN ALL AREAS IN ACCORDANCE WITH THE STATE'S DEPARTMENT OF TRANSPORTATION STANDARDS FOR TRAFFIC CONTROL.

44. THE CONTRACTOR SHALL NOTIFY THE CROWN CASTLE REPRESENTATIVE WHERE A CONFLICT OCCURS ON ANY OF THE CONTRACT DOCUMENTS. THE CONTRACTOR IS NOT TO ORDER MATERIAL OR CONSTRUCT ANY PORTION OF THE WORK THAT IS IN CONFLICT UNTIL IT IS RESOLVED BY THE CROWN CASTLE REPRESENTATIVE. CONTRACTOR SHALL FOLLOW ALL APPLICABLE CROWN CASTLE SMALL CELL DESIGN AND CONSTRUCTION STANDARDS.

45. CONTRACTOR TO PROVIDE TEMPORARY TOILET FACILITIES FOR DURATION OF PROJECT.

46. CONTRACTOR SHALL COORDINATE ALL UTILITY CONNECTIONS WITH APPROPRIATE UTILITY OWNERS.

47. THESE PLANS ARE NOT FOR RECORDATION OR CONVEYANCE.

GENERAL UTILITY NOTES:

1. CONTRACTOR SHALL CONTACT ALL UTILITY COMPANIES IMMEDIATELY AFTER BID IS AWARDED AND ENSURE THE UTILITY COMPANIES HAVE THE ESSENTIALS REQUIRED FOR COMPLETE SERVICE INSTALLATION. CONTRACTOR SHALL NOTIFY CONSTRUCTION MANAGER AND ENGINEER OF ANY TIME FRAMES ESTABLISHED BY UTILITY COMPANIES WHICH WILL NOT MEET OPENING DATE.

2. CONTRACTOR SHALL VERIFY THE SIZE, LOCATION, INVERT ELEVATION, AND CONDITION OF EXISTING UTILITIES WHICH ARE INTENDED TO BE UTILIZED AS A CONNECTION POINT FOR ALL PROPOSED UTILITIES, PRIOR TO ANY CONSTRUCTION. CONTRACTOR TO ENSURE EXISTING UTILITIES ARE IN GOOD CONDITION AND FREE FLOWING (IF APPLICABLE). IF ELEVATIONS, SIZE OR LOCATION DIFFER FROM WHAT IS SHOWN, CONTRACTOR SHALL NOTIFY ENGINEER IMMEDIATELY.

3. WHERE PLANS PROVIDE FOR PROPOSED WORK TO BE CONNECTED TO, OR CROSS OVER AN EXISTING SEWER OR UNDERGROUND UTILITY, THE CONTRACTOR SHALL LOCATE THE EXISTING PIPES OR UTILITIES BOTH AS TO LINE AND GRADE BEFORE STARTING THE PROPOSED WORK. IF IT IS DETERMINED THAT THE ELEVATION OF THE EXISTING CONDUIT, OR EXISTING APPURTENANCE RESULTS IN A CHANGE IN THE PLAN, THE ENGINEER SHALL BE NOTIFIED BEFORE STARTING CONSTRUCTION OF ANY PORTION OF THE PROPOSED WORK WHICH WOULD BE AFFECTED BY THE INTERFERENCE WITH AN EXISTING FACILITY. PAYMENT FOR ALL THE OPERATIONS DESCRIBED ABOVE SHALL BE INCLUDED IN THE CONTRACT PRICE FOR THE PERTINENT ITEM.

MAINTENANCE OF ACCESS AND TRAFFIC

1. DURING THE CONSTRUCTION PERIOD; SIDEWALKS, SHOULDERS, TRAVEL LANE(S), OR STREETS MAY HAVE TO BE TEMPORARILY CLOSED OR RESTRICTED FOR THE UNLOADING / LOADING OF EQUIPMENT OR AS A RESULT OF CONSTRUCTION ACTIVITIES THEMSELVES. IT IS THE CONTRACTOR'S RESPONSIBILITY TO COORDINATE DIRECTLY WITH THE LOCAL GOVERNING AUTHORITIES ON ANY SUCH CLOSURES AND MUST OBTAIN WRITTEN PERMISSION FROM THE APPROPRIATE AUTHORITIES PRIOR TO IMPLEMENTING SUCH CLOSURES OR RESTRICTIONS. ANY CLOSURE OR RESTRICTION MUST COMPLY WITH THE STATE MANUAL OF UNIFORM CONTROL DEVICES (MUTCD) FOR STREETS AND HIGHWAYS (LATEST EDITION AND REVISION), AND WITH ANY AND ALL ADDITIONAL APPLICABLE CITY, VILLAGE, OR COUNTY REQUIREMENTS.

2. IF TRAFFIC PLANS NOT INCLUDED IN THE CONSTRUCTION DRAWING SET, THE CONTRACTOR SHALL PREPARE AND SUBMIT A FORMAL TRAFFIC CONTROL / MOT PLAN TO THE LOCAL GOVERNING AUTHORITIES IF REQUESTED. ALL REQUIRED CONSTRUCTION TRAFFIC MAINTENANCE DEVICES SHALL BE PROVIDED, ERECTED AND MAINTAINED, AND ULTIMATELY REMOVED BY THE CONTRACTOR. THE CONTRACTOR SHALL MAINTAIN SAFE AND SATISFACTORYACCESS TO ALL ABUTTING PROPERTIES AND INTERSECTING STREET AT ALL TIMES DURING THE CONSTRUCTION OF THE IMPROVEMENTS ANTICIPATED. DRIVEWAYS MUST BE MAINTAINED AND ALL TRENCHES SHALL BE BACKFILLED AT THE END OF EACH WORK DAY. PER THE STATE MUTCD AND OTHER APPLICABLE APPROPRIATE GOVERNING REQUIREMENTS, THE CONTRACTOR SHALL PROVIDE ALL NECESSARY SAFEGUARDS SUCH AS BARRICADES, SATISFACTORY BARRIERS, CONES, SIGNAGE, BARRELS, MESSAGE BOARDS, LIGHTING, FLAGMEN, LAW ENFORCEMENT OFFICERS, ETC. TO AVOID DAMAGE AND / OR INJURY TO VEHICLES AND PERSONS TRAVERSING THE CONSTRUCTION AREA.

NOTE:
THIS MAP MAY NOT BE A CERTIFIED SURVEY AND HAS NOT BEEN REVIEWED BY A LOCAL GOVERNMENT AGENCY FOR COMPLIANCE WITH ANY APPLICABLE LAND DEVELOPMENT REGULATIONS AND HAS NOT BEEN REVIEWED FOR COMPLIANCE WITH RECORDING REQUIREMENTS FOR PLATS.

CROWN CASTLE
1500 CORPORATE DRIVE
CANONSBURG, PA 15317

SCU #:
494325

NODE #:
SC-NC 0448

A&E PROJECT #:
NEW POLE SET

PROJECT NAME:
FAYETTEVILLE, NC

ADDRESS:
383 FRANKLIN ST
FAYETTEVILLE, NC 28301

ISSUED FOR:

REV	DATE	DRWN	DESCRIPTION	DES./QA
A	3/20/2020	ZTK	PRELIMINARY	GS
B	4/9/2020	ZTK	PRELIMINARY	GS
0	4/20/2020	ZTK	CONSTRUCTION	AJF

GENERAL NOTES

DocuSigned by:
Andrew Fandozzi
BAD6086DD...

NORTH CAROLINA PROFESSIONAL ENGINEER SEAL 042222 ANDREW JOSEPH FANDOZZI III

Crown Castle USA Inc. Business License #D-0410

4/20/2020 | 8:19:25 AM EDT

IT IS A VIOLATION OF LAW FOR ANY PERSON, UNLESS THEY ARE ACTING UNDER THE DIRECTION OF A LICENSED PROFESSIONAL ENGINEER, TO ALTER THIS DOCUMENT.

SHEET NUMBER:	REVISION:
T-2	0

GENERAL NOTES:

ELECTRIC 120V POWER SUPPLY TO NODE:

1. CONTRACTOR SHALL CO-ORDINATE WITH POWER COMPANY AND VERIFY EXISTING TRANSFORMER SHORT CIRCUIT RATING, CALCULATE FAULT CURRENT AT PANEL, AND VERIFY ALL EXISTING BREAKERS AND NEW BREAKERS HAVE AIC RATING THAT EXCEEDS FAULT CURRENT AT SOURCE. CONTRACTOR SHALL INFORM CONSTRUCTION MANAGER AND EOR IF EXISTING BREAKERS ARE NOT RATED FOR AVAILABLE SHORT CIRCUIT.
2. NOTE: NEW ELECTRICAL CONDUIT WITH POWER SUPPLY CABLE MUST BE INSTALLED PER NATIONAL ELECTRIC SAFETY CODE, LATEST EDITION.
3. CROWN CASTLE CONTRACTOR TO PLACE WRAP AROUND IDENTIFICATION TAG ON NEW CONDUCTOR CABLE.
4. CROWN CASTLE CONTRACTOR SHALL BE RESPONSIBLE FOR HIS OWN LABOR, EQUIPMENT, MEASUREMENTS AND THE FURNISHING AND INSTALLING OF ALL NECESSARY MATERIALS TO COMPLETE THE POWER SUPPLY CIRCUIT
5. CROWN CASTLE CONTRACTOR TO PLACE MULETAPE WITH SEQUENTIAL FOOTAGE MARKINGS MINIMUM 1800 LBS. STRENGTH.
6. THE CROWN CASTLE CONTRACTOR IS RESPONSIBLE FOR PROTECTION OF THE NEW CABLE AND TO THE MOTORING AND PEDESTRIAN TRAFFIC WHERE IT IS NECESSARY TO "FIGURE 8" THE CABLE DURING THE PLACEMENT PROCESS.
7. WHERE APPLICABLE, UPON COMPLETION OF PLACEMENT OF CABLE AT EACH MANHOLE THE NEW CROWN CASTLE CABLE ENTERING AND EXITING THE MANHOLE IS TO BE CAREFULLY POSITIONED TO THE APPROPRIATE WALL OF THE MANHOLE, POSITIONED ON THE MANHOLE WALL WITH MANHOLE RACK HOOK(S) AND SECURED TO THE HOOK(S) WITH A PLASTIC TIE(S). AT NO MANHOLE IS THE NEW CROWN CASTLE CABLE OR CABLE COIL TO BE LEFT ON THE MANHOLE FLOOR.
8. CROWN CASTLE CONTRACTOR IS RESPONSIBLE FOR ACCURATELY RECORDING THE CABLE FOOTAGE MARKING OF THE NEW CABLE AT BOTH THE TERMINATION POINT AND ORIGIN AND PLACING THAT INFORMATION ON THE FIELD PRINTS TO BE GIVEN TO CROWN CASTLE.
9. WHERE APPLICABLE, CROWN CASTLE CONTRACTOR IS RESPONSIBLE FOR ACCURATELY RECORDING THE STORAGE LOOP FOOTAGE PLACED AT EACH SPECIFIED LOCATION AND PLACING THAT INFORMATION ON THE FIELD PRINTS TO BE GIVEN TO CROWN CASTLE.
10. CROWN CASTLE CONTRACTOR SHALL BE RESPONSIBLE FOR HIS OWN LABOR, MEASUREMENTS AND THE FURNISHING AND INSTALLING OF ALL NECESSARY MATERIALS TO COMPLETE THE COMMUNICATION CONDUIT PATH BETWEEN THE PROPOSED NODE LOCATION AND EXISTING SERVICE POINT.
11. CONTRACTOR TO COORDINATE WITH CROWN CASTLE TO VERIFY THE EXACT LOCATION OF EXISTING SERVICE POINT.
12. THE INSTALLATION OF 120V ELECTRICAL SUPPLY CONDUIT & CABLES, INSTALLATION OF COMMUNICATION CONDUIT & CABLE, ALL TESTING, INCLUDING BUT NOT LIMITED TO ALL MATERIAL, CABLE TERMINATIONS, SPLICES, GROUND CABLE CONNECTIONS, TRENCHING AND RESTORATION ARE TO MEET AND/OR EXCEEDED THE GREATER OF THE FOLLOWING GOVERNING AUTHORITY, THE NATIONAL ELECTRIC SAFETY CODE LATEST ADDITION, ALL OSHA SAFETY REQUIREMENTS, ALL GOVERNING RIGHTS-OF-WAY POLICIES AND PROCEDURES AND THE POLICY AND PRACTICES SET FORTH BY CROWN CASTLE.
13. CONTRACTOR SHALL BE RESPONSIBLE FOR HIS OWN LABOR, EQUIPMENT, SAFETY, TRAFFIC CONTROL, MEASUREMENTS AND THE FURNISHING AND INSTALLING OF ALL NECESSARY MATERIALS REQUIRED. TOO FULLY INSTALL AND EXECUTE THE INSTALLMENT OF THE CROWN CASTLE PROJECT.
14. CONTRACTOR IS RESPONSIBLE FOR THE CONTACTING OF AND COORDINATION WITH:
LOCAL UTILITY PROTECTION SERVICES
ELECTRIC POWER PROVIDER
GOVERNING DIVISION OF ENGINEERING & CONSTRUCTION
GOVERNING DIVISION OF TRAFFIC & ENGINEERING
GOVERNING DIVISION OF POLICE & TRAFFIC
AND ALL PRIVATE UTILITIES 48 HOURS BEFORE YOU DIG. CONTRACTOR TO SUPPLY CROWN CASTLE DIG TICKET NUMBER BEFORE START OF CONSTRUCTION.
15. ALL ITEMS REFERENCED THROUGHOUT ("THIS PLAN") ARE ONLY A GUIDELINE AND AS SUCH DOES NOT COVER EVERY POSSIBLE CONTINGENCY THAT MAY OCCUR. THIS GUIDELINE/PLAN IF PROPERLY FOLLOWED SHOULD ALLOW THE CONTRACTOR TO PLAN AND EXECUTE THE OPERATIONS TO CONSTRUCT THE CROWN CASTLE PROJECT. HOWEVER, THE CONTRACTOR IS SOLELY RESPONSIBLE FOR ITS OPERATION AND SHALL REMAIN SOLELY LIABLE INCLUDING BUT LIMITED TO THE FOLLOWING ITEMS: ALL SAFETY REQUIREMENTS INCLUDING BUT NOT LIMITED TO PUBLIC AND WORKER SAFETY, SAFETY OF EXISTING AND PUBLIC UTILITIES, CONTACTING THE OHIO UTILITY PROTECTION SERVICE BEFORE WORK BEGINS, LOCATING AND VERIFYING ALL PUBLIC AND PRIVATE UTILITIES, MAINTENANCE OF TRAFFIC WHEN APPLICABLE, ALL REQUIRED PERMITS AND/OR FEES, PERMANENT TRAFFIC CONTROL ITEMS, WATERSHED PROTECTION, SEDIMENT AND EROSION CONTROL, PROTECTION OF ENDANGERED SPECIES, QUALITY OF MATERIAL, CRAFTSMANSHIP, RESTORATION OF EXISTING UTILITIES FACILITIES, RESTORATION TO THE ENVIRONMENT EQUAL TO OR BETTER THAN ORIGINAL CONDITION BEFORE CONSTRUCTION ACTIVITIES BEGAN, AND TO ALL ADVERSE PUBLIC AND PRIVATE ENVIRONMENTAL IMPACTS CAUSED BY ITS OPERATIONS.
16. INFORMATION ON THESE SHEETS HAVE BEEN PREPARED FROM THE BEST AVAILABLE INFORMATION AND SOURCES. EXISTING UTILITIES FACILITIES LOCATIONS ARE BASED ON RECORDS/VERBAL INFORMATION AND PHYSICAL FEATURES AT THE TIME OF THE SURVEY.

GROUNDING NOTES:
(REFERENCE CROWN STANDARD – 337910 GROUNDING AND BONDING REQUIREMENTS FOR SMALL CELL NODES)

1. ALL CROWN PLANTS SHALL BE GROUNDED IN COMPLIANCE WITH NEC, NESC AND/OR G095 (CALIFORNIA). LOCAL ORDINANCES, STATE CODES OR UTILITY STANDARDS MAY EXCEED NESC/NEC/G095 AND CROWN GROUNDING STANDARDS.
2. ALWAYS COMPLY WITH THE REQUIREMENTS OF THE UTILITY POLE OWNER:
3. CROWN CASTLE REQUIRES (1) MAIN VERTICAL GROUND RISER (VGR) CONDUCTOR FROM THE ANTENNA MOUNTING BRACKET AT THE TOP/SIDE OF THE POLE TO THE GROUNDING ELECTRODE SYSTEM AT THE BASE OF THE POLE. MAIN VGR SHALL CONSIST OF A MINIMUM # 6 AWG CONDUCTOR. THE MAIN VGR SHALL BE PROTECTED FOR THE FIRST 8 FEET OF THE POLE WITH A U-GUARD OR NON-CONDUCTIVE CONDUIT. THE VGR SHALL EXTEND TO THE TOP OF THE POLE AND STAPLED EVERY 24" WITH CORROSION RESISTANT (DIPPED GALVANIZED) STAPLES ON WOODEN POLES. FOR CONDUCTIVE POLES, SECURE THE VGR USING A NON-CONDUCTIVE CONDUIT SYSTEM, STRAIN RELIEF AND NON-CONDUCTIVE ATTACHMENTS METHODS. WHERE POSSIBLE, MAINTAIN A MINIMUM 2" SEPARATION BETWEEN THE VGR AND ANY OTHER CONDUCTOR. ALWAYS USE JACKETED CABLE VGR ON CONDUCTIVE POLES.
4. GROUND ROD(S) SHALL BE A MINIMUM 5/8" DIAMETER, 8' IN LENGTH, AND COPPER-CLAD STEEL. WHEN ADDING A SECOND GROUND ROD, INSTALL THE ADDITIONAL ROD A MINIMUM OF 6' APART FROM THE FIRST ROD. GROUND ROD(S) SHALL BE INSTALLED IN ACCORDANCE WITH NESC/NEC/G095 (CALIFORNIA) CODES WITH REGARDS TO DEPTH AND DISTANCE FROM POLE. AT A MINIMUM, 8 FT. OF GROUND ROD(S) MUST BE INSTALLED BELOW THE FROST LINE. FOR EXAMPLE, INSTALL A 10 FT. ROD FOR FROST LINE OF 2 FT. OTHERWISE, TOP OF THE GROUND ROD(S) AND ASSOCIATED BONDING CONDUCTORS SHALL BE BURIED MINIMUM OF 4" BELOW GRADE. A MINIMUM #6 AWG MAIN VERTICAL GROUND RISER SHALL BE ATTACHED DIRECTLY TO THE CLOSEST GROUND ROD.
5. WHERE A MAIN GROUND BAR (MGB) IS INSTALLED IN ORDER TO TERMINATE AVAILABLE GROUNDING CONDUCTORS, THE MGB SHALL BE PRE-CONFIGURED TO ACCEPT 2-HOLE GROUND LUGS. THE MGB SHOULD BE MOUNTED UTILIZING INSULATING STANDOFFS TO AVOID UNWANTED GROUND LOOP CURRENTS AND CONTACT BETWEEN DISSIMILAR METALS.

6. SHOULD BE MOUNTED UTILIZING INSULATING STANDOFFS TO AVOID UNWANTED GROUND LOOP CURRENTS AND CONTACT BETWEEN DISSIMILAR METALS.
7. THE VERTICAL GROUND RISER (VGR) SHALL BE ATTACHED DIRECTLY TO THE ANTENNA BRACKET VIA A 316-STAINLESS STEEL BOLT. DISSIMILAR METALS SHOULD NOT BE IN DIRECT CONTACT, WITHOUT A LISTED COMPONENT, SUCH AS STAINLESS-STEEL COMPONENTS. REMOVE PAINT AS REQUIRED TO CREATE A PROPER BOND TO THE CONDUCTIVE SURFACE. IF THE ANTENNA HAS A GROUND TERMINAL, BOND THE ANTENNA TO THE VGR WITH A #6AWG GROUND CONDUCTOR. IF THE ANTENNA DOES NOT HAVE A FACTORY GROUND TERMINAL, THEN DO NOT ADD ONE. IN THIS CASE, GROUND THE ANTENNA BRACKET.
8. COAXIAL CABLES SHALL BE GROUNDED USING A GROUND KIT INSTALLED BEFORE THE DRIP LOOP AT THE ENTRY TO THE RADIO CABINET. FOR TOP ENTRY RADIOS WHERE RF SURGE PROTECTIVE DEVICES (SPDS) ARE INSTALLED, GROUNDING THE SPD WILL SUFFICE
9. MGB SHALL BE MOUNTED ADJACENT TO OR WITHIN THE RADIO EQUIPMENT CABINET ON A NON-CONDUCTIVE POLE. ON A CONDUCTIVE POLE, THE MGB MAY BE MOUNTED INSIDE THE POLE WITHIN THE RADIO CABINET OR ON THE EXTERIOR SURFACE OF THE POLE. MOUNT THE MGB WHERE IT BEST SUITES THE APPLICATION, SUCH AS UNDER THE RADIO CABINET AND NOT AT A HEIGHT LOWER THAN AN 8' ELEVATION. WHEN GROUNDING EQUIPMENT INSIDE A SHROUD, CONNECT TO THE SHROUD MANUFACTURER'S GROUND BUS OR MGB IF LOCATED THERE.
10. ALL POLE MOUNTED DEVICES, INCLUDING BUT ANTENNA MOUNTS, ANTENNAS WITH FACTORY GROUND TERMINAL, MOUNTING BRACKETS, AND RADIO EQUIPMENT CABINETS SHALL BE BONDED WITH A #6 AWG STRAP/JUMPER TO THE MAIN VGR CONDUCTOR WITH IRREVERSIBLE COMPRESSION CLAMPS. INSTALL BONDING JUMPER TO THE VGR WITH MINIMUM 8" BENDING RADIUS AND IN A DOWNWARD DIRECTION TOWARD THE MGB AND ITS ASSOCIATED SITE GROUNDING ELECTRODE SYSTEM. ALL METALLIC COMPONENTS SHOULD HAVE AN INTENTIONAL BOND. AVOID GROUND LOOPS FROM THE EQUIPMENT CHASSIS TO THE CONDUCTIVE SHROUD VIA NON-CONDUCTIVE BACKING PLATE.
11. WHERE AN MGB IS INSTALLED, ALL CONNECTIONS TO THE MGB SHALL UTILIZE 2-HOLE CONNECTOR LUG(S).

11.1. CONNECTOR LUGS MUST ATTACH TO THE BUS BAR WITH TWO HOLES FACING UP AND OUT WITH THE BOLT HEADS ON THE BACK SIDE OF THE BUS BAR.

11.2. STACKING OF CONNECTOR LUGS IS PROHIBITED.

11.3. ANY MODIFICATION TO THE CONNECTOR LUGS IS PROHIBITED, INCLUDING BUT NOT LIMITED TO GRINDING, CUTTING OR BENDING.

11.4. CONNECTOR LUGS MUST BE PLACED WITH EVEN SPACING AND MUST NOT COME IN CONTACT WITH ANOTHER CONNECTOR LUG.

11.5. SLOTTED HOLE OF THE CONNECTOR LUG SHOULD BE PLACED ON THE SLOTTED HOLE OF THE MGB.

11.6. IF POSSIBLE, ALL CONNECTOR LUGS SHALL HAVE TWO (2) COMPRESSIONS PER LUG.

11.7. ALL CONNECTOR LUGS MUST HAVE NO-OX APPLIED TO WHEN CONTACTING ANOTHER METAL SURFACE, SUCH AS THE MGB OR ANY OTHER METALLIC SURFACES, TO REDUCE OXIDATION.

11.7.1. ONLY SIMILAR METALS CAN BE IN DIRECT CONTACT.

11.7.2. LISTED MATERIALS, SUCH AS STAINLESS STEEL, SHALL BE USED WHEN DISSIMILAR METALS ARE IN DIRECT CONTACT, SUCH AS COPPER TO STEEL, OR COPPER TO ALUMINUM.

11.8. ALL CONNECTOR LUGS SHOULD BE ATTACHED USING MINIMUM 3/8" HARDWARE X 2 PER EACH LUG AND IN THE FOLLOWING MANNER:

11.8.1. PLACE CONNECTOR LUG ON FRONT SIDE OF MGB AND IN DIRECT CONTACT WITH MGB.

11.8.2. PLACE BOLT THROUGH THE BACK THROUGH MGB AND CONNECTOR LUG. SIZE BOLT HEAD TO AVOID THE NEED OF A FLAT WASHER.

11.8.3. PLACE NUT AND LOCK WASHER ON BOLT, ALL NUTS ON CONNECTOR BOLTS MUST BE TIGHTENED SO THAT THE LOCK WASHERS ARE COMPLETELY COMPRESSED. FOLLOW PROPER TORQUE SPECIFICATIONS.

12. NO OTHER MECHANICAL CONNECTIONS ARE ACCEPTABLE EXCEPT IN THE EVENT OF MECHANICAL FITTINGS BEING AN INTEGRAL PART OF THE PRODUCT FROM THE FACTORY.
13. ALL BONDING ABOVE GRADE LEVEL TO THE VERTICAL GROUND RISER, SHALL BE MADE WITH IRREVERSIBLE CLAMPS. EXOTHERMIC WELD IS PREFERRED TO CONNECT THE VERTICAL GROUND RISER TO THE SITE'S GROUNDING ELECTRODE SYSTEM.
14. FOR CONDUCTIVE POLES, ALL METALLIC COMPONENTS AND THE CONDUCTIVE POLE ITSELF SHOULD HAVE AN INTENTIONAL BOND TO THE VGR. FOR ELECTRIC METERS, SERVICE DISCONNECT AND RADIO EQUIPMENT INSTALLED ON CONDUCTIVE POLES, AVOID UNINTENTIONAL BONDING THROUGH THE CHASSIS AND THE METAL POLE BY INSTALLING NON-CONDUCTIVE ATTACHMENT HARDWARE AND A NON-CONDUCTIVE BACKING PLATE BETWEEN ENERGIZED EQUIPMENT AND A CONDUCTIVE SHROUD BODY.
15. ONLY ONE NEUTRAL – GROUND BOND IS TO BE MADE AT ONE OF THE THREE ALLOWABLE LOCATIONS: (1) AT SERVICE ENTRANCE (WEATHERHEAD IF AERIAL, POWER HANDHOLE IF UNDERGROUND,) (2) IN THE METER ENCLOSURE OR (3) AT THE SERVICE DISCONNECT, "FIRST DISCONNECTING MEANS". LOCATION (3) IS ALWAYS PREFERRED. WHERE LOCATIONS (1) OR (2) ARE SELECTED BY THE AUTHORITY HAVING JURISDICTION (AHJ), AN EQUIPMENT GROUNDING CONDUCTOR (EGC) SHALL BE INSTALLED FROM THE NEUTRAL – GROUND BOND TO THE GROUND BUS IN THE ELECTRICAL SERVICE DISCONNECT. WHERE AN EGC IS INSTALLED, IT MUST BE ENCLOSED IN THE SAME NON-CONDUCTIVE CONDUIT BODY ALONG WITH ITS ASSOCIATED PHASE AND NEUTRAL CONDUCTORS.

PART 2 – TESTING AND DOCUMENTATION

2.1 TESTING

1. THE FIRST TEST TO BE CONDUCTED IS THE EARTH GROUND RESISTANCE MEASUREMENT. FOR A NEWLY INSTALLED GROUND ELECTRODE SYSTEM, THE METHOD TO CONDUCT EARTH GROUND RESISTANCE READINGS STARTS FIRST WITH THE USE OF A 3-POINT, 62% FALL POTENTIAL GROUND METER. THE METER IS SETUP TO READ THE SITE GROUND RESISTANCE OF INSTALLED GROUND ROD(S) IN OHMS. PRIOR TO ATTACHING THE MAIN VERTICAL GROUND RISER TO THE SITE GROUNDING ELECTRODE SYSTEM. IF THE READING RESULT IS GREATER THAN 25 OHMS, THEN THE INSTALLER WILL NEED TO ADD AND BOND A CODE COMPLIANT ELECTRODE SUCH AS A GROUND ROD A MINIMUM OF 6' AWAY, IN ORDER TO BE NEC COMPLIANT.
2. A SECOND TEST OF THE EARTH GROUND RESISTANCE MEASUREMENT SHOULD BE CONDUCTED ONCE THE MAIN VERTICAL GROUND RISER IS CONNECTED AND BONDED WITH THE ELECTRICAL GRID SERVICE AND ALL OTHER EQUIPMENT ON THE POLE. IF ALL BONDING CONNECTIONS ARE PROPERLY MADE, USING 3-POINT, 62% FALL POTENTIAL GROUND METER THE GROUND RESISTANCE READING SHOULD BE 5 OHMS OR LESS AFTER CONNECTION TO THE POWER SYSTEM NEUTRAL.
3. THE THIRD TEST IS A BONDING AND OBJECTIONABLE CURRENT TEST THAT MUST BE PERFORMED BEFORE SITE ACCEPTANCE WITH SITE POWER HOT AND EQUIPMENT ENERGIZED. THE TEST CAN BE CONDUCTED WITH A CLAMP-ON EARTH GROUND METER. THE READING AT EACH ABOVE GRADE GROUND BONDING CONDUCTOR (GREEN WIRE) SHOULD YIELD A "LOOP" READING. ANY READING BELOW 1 OHM IS ALSO AN ACCEPTABLE BONDING READING, OR EQUIVALENT TO A "LOOP". MORE THAN ONE BOND READING SHOULD BE TAKEN, AT OTHER GROUND CONDUCTORS ALONG THE POLE, ASSURING THAT LOOPS ARE PRESENT AND THAT THE SITE IS SAFE FOR FUTURE WORKERS.

3.1. OBJECTIONABLE CURRENT IS DEFINED AS "ANY CURRENT FLOW OVER CONDUCTORS NOT DESIGNED TO NORMALLY CARRY CURRENT."

3.2. OBJECTIONABLE CURRENT ON GROUNDING AND BONDING PATHS OCCUR WHEN AN IMPROPER NEUTRAL-TO-CHASSIS BOND CREATES A PARALLEL PATH FOR NEUTRAL CURRENT TO RETURN TO THE POWER SUPPLY VIA METAL PARTS OF THE ELECTRICAL SYSTEM IN VIOLATION OF NEC 250.142.

3.3. ON SMALL CELL AND ODAS NODES, OBJECTIONABLE CURRENT WILL BE PRESENT WHEN MORE THAN ONE NEUTRAL TO GROUND BOND IS INSTALLED ON THE NODE EQUIPMENT. A CORRECT NODE WIRING AND GROUNDING/BONDING DESIGN IF IMPLEMENTED BY THE NODE CONTRACTOR AS SPECIFIED WILL PREVENT THE OCCURRENCE OF OBJECTIONABLE CURRENT AT THE NODE.

GROUNDING AND BONDING PATHS SHALL BE TESTED FOR OBJECTIONABLE CURRENT BEFORE NODE ACCEPTANCE. A CLAMP ON AMMETER IS USED TO TEST GROUNDING AND BONDING CONDUCTORS.

ANY CURRENT MORE THAN 250 MILLIAMPS SHOULD BE ADDRESSED AND CORRECTED.

4. THE FOURTH TEST IS A CONTACT VOLTAGE TEST

CONTACT VOLTAGE IS DEFINED BY THE IEEE AS FOLLOWS: "A VOLTAGE RESULTING FROM ABNORMAL POWER SYSTEM CONDITIONS THAT MAY BE PRESENT BETWEEN TWO CONDUCTIVE SURFACES THAT CAN BE SIMULTANEOUSLY CONTACTED BY MEMBERS OF THE GENERAL PUBLIC AND/OR THEIR ANIMALS. CONTACT VOLTAGE IS CAUSED BY POWER SYSTEM FAULT CURRENT AS IT FLOWS THROUGH THE IMPEDANCE OF AVAILABLE FAULT CURRENT PATHWAYS. CONTACT VOLTAGE IS NOT RELATED TO NORMAL SYSTEM OPERATION AND CAN EXIST AT LEVELS THAT MAY BE HAZARDOUS. NOTE: "CONDUCTIVE SURFACES" AS USED IN THIS DEFINITION ARE INTENDED TO INCLUDE THE EARTH AND/OR EXTENSIONS OF THE EARTH SUCH AS CONCRETE SIDEWALKS AND METAL FLOOR DRAINS."

4.1. CONTACT VOLTAGE CAN OCCUR ANYWHERE BUT IS MORE LIKELY TO BE PRESENT IN URBAN ENVIRONMENTS WITH AGING ELECTRICAL INFRASTRUCTURE, AT SPLICE POINTS IN UNDERGROUND WIRE INSTALLATIONS NEAR SIDEWALKS, STREETLIGHTS AND MANHOLE COVERS.

4.2. THE DANGER FROM CONTACT VOLTAGE IS A FUNCTION OF BODY RESISTANCE, (HOW CONDUCTIVE YOU ARE) DURATION OF EXPOSURE, AND HOW MUCH CURRENT CAN BE SUPPLIED. BEING BAREFOOT OR WET CAN INCREASE THE HAZARD.

4.3. CONTACT VOLTAGE WILL RESULT FROM UNINTENTIONAL ENERGIZATION OF A METALLIC OBJECT WHEN AN ELECTRICAL OR PHASE CONDUCTOR COMES IN CONTACT. THE RESULTING ELECTRICAL POTENTIAL CAN RANGE ANYWHERE FROM A FEW VOLTS UP TO THE PHASE VOLTAGE, 120V OR MORE.

4.4. CROWN POLICY IS TO TEST FOR CONTACT VOLTAGE ON ALL AVAILABLE CONDUCTIVE (INCLUDING CONCRETE) SURFACES VIA A HANDHELD FOREIGN VOLTAGE DETECTOR, BY ALL PERSONNEL UPON APPROACHING A NODE LOCATION.

4.5. WHEN PERFORMING THIS TEST IF ANY VOLTAGE PRESENT IT SHOULD BE REPORTED, INVESTIGATED BEFORE LEAVING THE SITE.

NOTE:

THIS MAP MAY NOT BE A CERTIFIED SURVEY AND HAS NOT BEEN REVIEWED BY A LOCAL GOVERNMENT AGENCY FOR COMPLIANCE WITH ANY APPLICABLE LAND DEVELOPMENT REGULATIONS AND HAS NOT BEEN REVIEWED FOR COMPLIANCE WITH RECORDING REQUIREMENTS FOR PLATS.

CROWN CASTLE
1500 CORPORATE DRIVE
CANONSBURG, PA 15317

SCU #:
494325

NODE #:
SC-NC 0448

A&E PROJECT #:
NEW POLE SET

PROJECT NAME:
FAYETTEVILLE, NC

ADDRESS:
383 FRANKLIN ST
FAYETTEVILLE, NC 28301

ISSUED FOR:

REV	DATE	DRWN	DESCRIPTION	DES./QA
A	3/20/2020	ZTK	PRELIMINARY	GS
B	4/9/2020	ZTK	PRELIMINARY	GS
0	4/20/2020	ZTK	CONSTRUCTION	AJF

GENERAL NOTES

DocuSigned by:
Andrew Fandozzi
BAD6066DD0...

NORTH CAROLINA PROFESSIONAL ENGINEER
SEAL
042222
ANDREW JOSEPH FANDOZZI III

Crown Castle USA Inc. Business License #D-0410

4/20/2020 | 8:19:25 AM EDT

IT IS A VIOLATION OF LAW FOR ANY PERSON, UNLESS THEY ARE ACTING UNDER THE DIRECTION OF A LICENSED PROFESSIONAL ENGINEER, TO ALTER THIS DOCUMENT.

SHEET NUMBER: T-3

REVISION: 0

DocuSign Envelope ID: 778918B9-1874-41AC-AEE4-E8C33E424250

NOTE:
LOCATION OF UNDERGROUND UTILITIES SHOWN ARE APPROXIMATED AND SHOWN FOR REFERENCE PURPOSES ONLY. THESE DRAWINGS ARE NOT TO BE USED FOR LOCATING UTILITIES. CONTRACTOR IS TO UTILIZE A UTILITY LOCATOR SERVICE TO VERIFY THE LOCATIONS OF UTILITIES PRIOR TO ANY EXCAVATION.

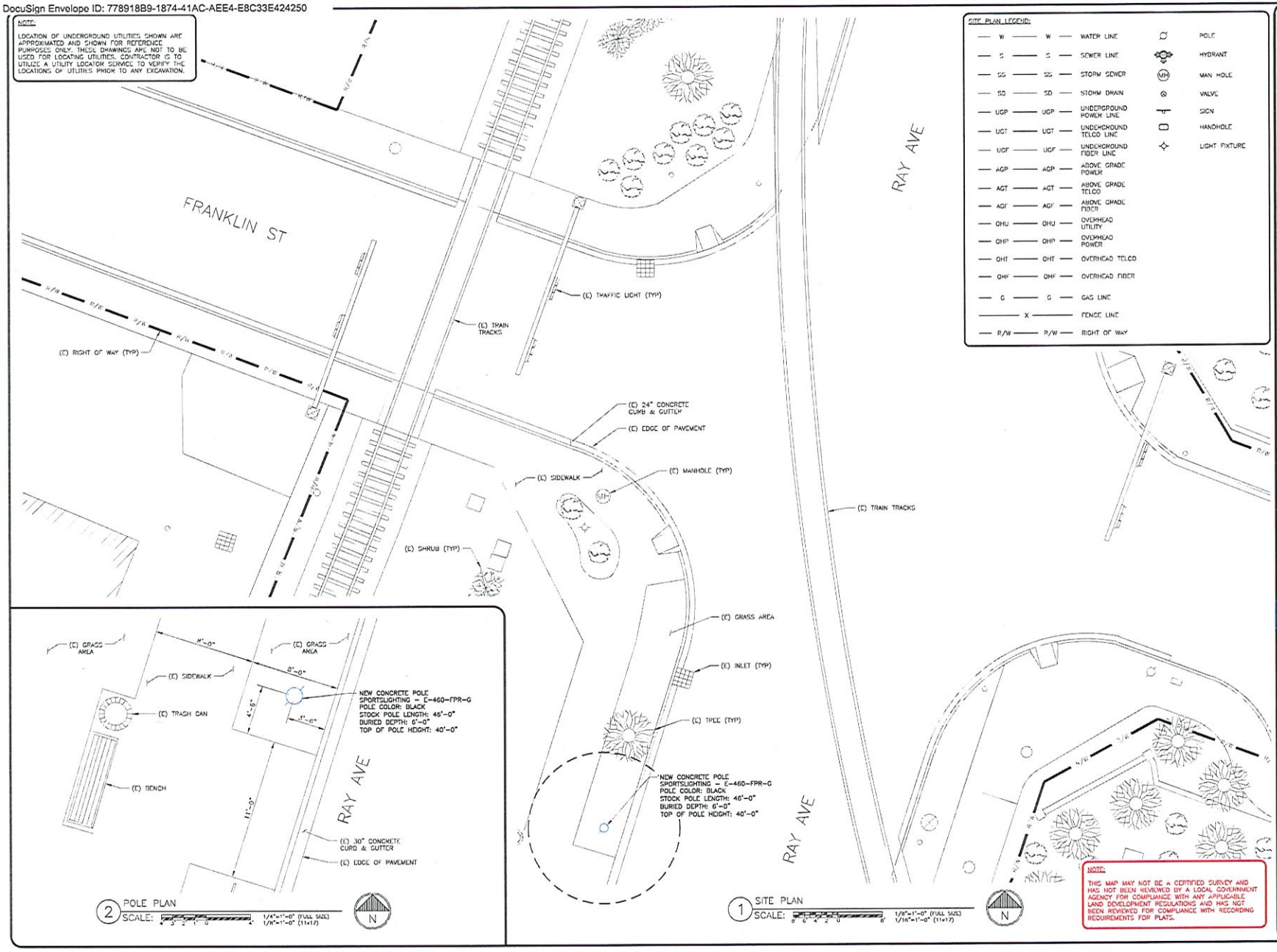

SITE PLAN LEGEND:

W	W	WATER LINE	POLE
S	S	SEWER LINE	HYDRANT
SS	SS	STORM SEWER	MAN HOLE
SD	SD	STORM DRAIN	VALVE
UGP	UGP	UNDERGROUND POWER LINE	SIGN
UGT	UGT	UNDERGROUND TELCO LINE	HANDHOLE
UGF	UGF	UNDERGROUND FIBER LINE	LIGHT FIXTURE
AGP	AGP	ABOVE GRADE POWER	
AGT	AGT	ABOVE GRADE TELCO	
AGF	AGF	ABOVE GRADE FIBER	
OHU	OHU	OVERHEAD UTILITY	
OHP	OHP	OVERHEAD POWER	
OHT	OHT	OVERHEAD TELCO	
OHF	OHF	OVERHEAD FIBER	
G	G	GAS LINE	
X		FENCE LINE	
R/W	R/W	RIGHT OF WAY	

NOTE:
THIS MAP MAY NOT BE A CERTIFIED SURVEY AND HAS NOT BEEN REVIEWED BY A LOCAL GOVERNMENT AGENCY FOR COMPLIANCE WITH ANY APPLICABLE LAND DEVELOPMENT REGULATIONS AND HAS NOT BEEN REVIEWED FOR COMPLIANCE WITH RECORDING REQUIREMENTS FOR PLATS.

CROWN CASTLE
1500 CORPORATE DRIVE
CANONSBURG, PA 15317

SCU #:
494325

NODE #:
SC-NC 0448

A&E PROJECT #:
NEW POLE SET

PROJECT NAME:
FAYETTEVILLE, NC

ADDRESS:
383 FRANKLIN ST
FAYETTEVILLE, NC 28301

ISSUED FOR:

REV	DATE	DRWN	DESCRIPTION	DES./QA
A	3/20/2020	ZTK	PRELIMINARY	GS
B	4/9/2020	ZTK	PRELIMINARY	GS
0	4/20/2020	ZTK	CONSTRUCTION	AJF

SITE PLAN

DocuSigned by:
Andrew Fandozzi
BAD6006D8B4A4...

NORTH CAROLINA PROFESSIONAL SEAL 042222 ENGINEER ANDREW JOSEPH FANDOZZI III

Crown Castle USA Inc. Business License #D-0410

4/20/2020 | 8:19:25 AM EDT

IT IS A VIOLATION OF LAW FOR ANY PERSON, UNLESS THEY ARE ACTING UNDER THE DIRECTION OF A LICENSED PROFESSIONAL ENGINEER, TO ALTER THIS DOCUMENT.

SHEET NUMBER: C-1

REVISION: 0

DocuSign Envelope ID: 778918B9-1874-41AC-AEE4-E8C33E424250

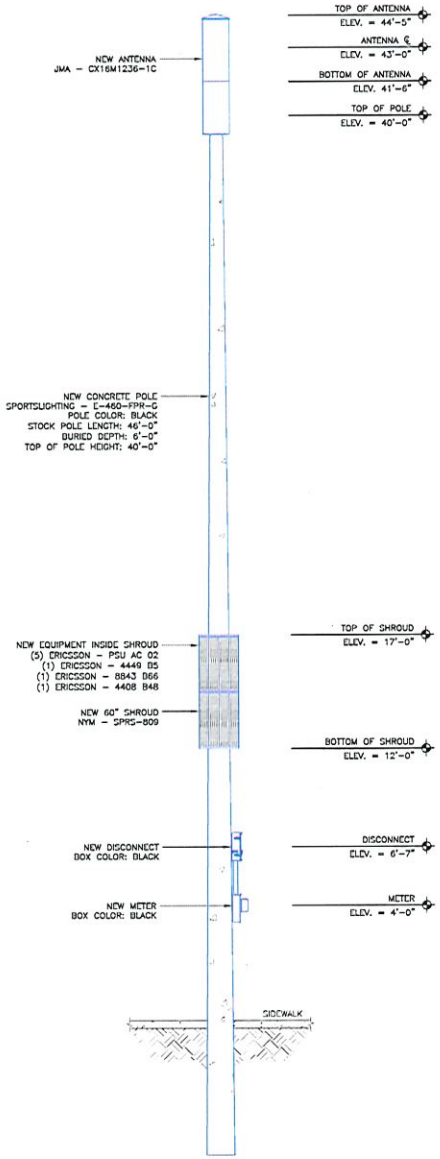

1 QUADRANT 12 POLE DETAIL
SCALE: 3/8"=1'-0" (FULL SIZE) 3/16"=1'-0" (11x17)

NOTE:

1. FIBER AND POWER CONDUIT ORIENTATION/DIRECTION SHOWN IS FOR PICTORIAL REFERENCE ONLY. PLEASE CONTACT THE FIBERTECH FIBER CONSTRUCTION ENGINEER (FCE) FOR ACTUAL ORIENTATION/DIRECTION PRIOR TO CONSTRUCTION.
2. POLE/CONDUIT INSTALLER TO PLACE A SMALL LOCATOR FLAG OR STAKE ABOVE GROUND WITH EITHER "FIBER" OR "POWER" WRITTEN ON IT TO INDICATE UNDERGROUND CONDUIT LOCATION.
3. POLE/CONDUIT INSTALLER TO ADD A 2"-PVC COUPLING, MINIMUM 8"-LONG SECTION OF 2"-PVC PIPE, AND 2"-PVC PIPE CAP (CAP NOT TO BE GLUED/CEMENTED) OR OTHER MEANS TO EACH SWEEP ELBOW COMING OUT OF THE POLE BELOW GROUND LEVEL AND TO EXTEND PAST EXPANDING FOAM/DIRT FILL TO INSURE NO EXPANDING FOAM/DIRT/DEBRIS RE-ENTERS THE PIPE EXTENSION OR SWEEP ELBOW.
4. POLE/CONDUIT INSTALLER TO PLACE MULE/PULL TAPE IN ALL CONDUITS.
5. ALL CONDUIT SHALL BE PLACED UP AND THROUGH CENTER/INTERIOR OF POLE (NOT EXTERIOR) UNLESS OTHERWISE SPECIFIED.
6. IN LIEU OF TWO (2) 2" CONDUITS FOR FIBERTECH FIBER, ONE (1) 4" CONDUIT MAY BE PLACED.
7. POLE IS NOT TO BE DRILLED OR ALTERED IN ANY WAY AT INSTALLATION WITHOUT APPROVAL.

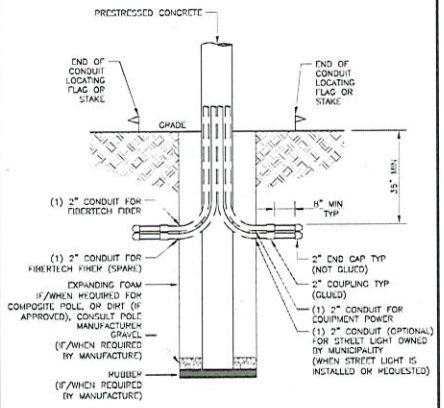

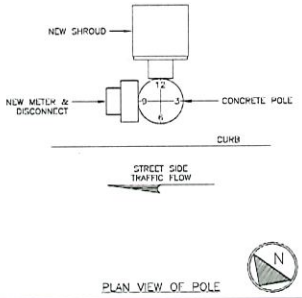

PLAN VIEW OF POLE

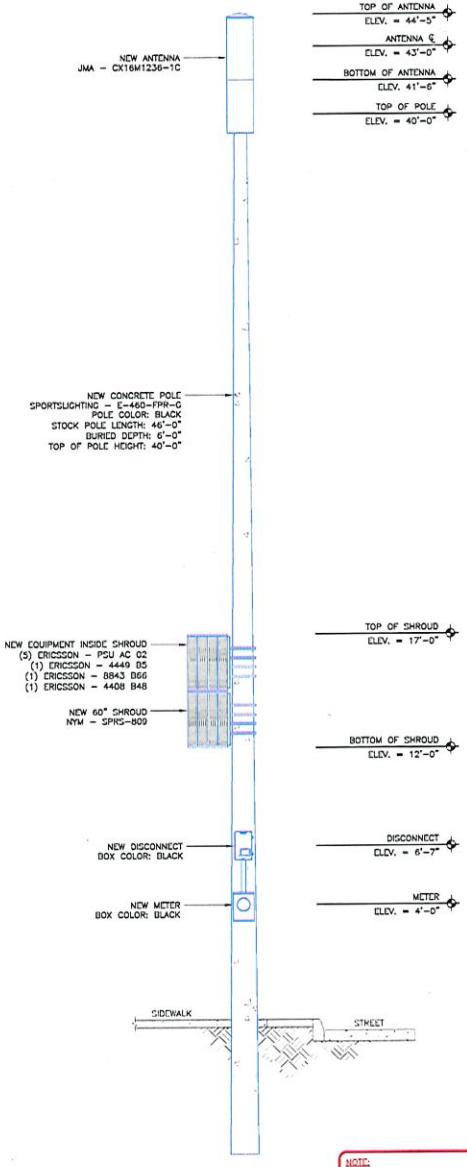

2 QUADRANT 9 POLE DETAIL
SCALE: 3/8"=1'-0" (FULL SIZE) 3/16"=1'-0" (11x17)

NOTE:

THIS MAP MAY NOT BE A CERTIFIED SURVEY AND HAS NOT BEEN REVIEWED BY A LOCAL GOVERNMENT AGENCY FOR COMPLIANCE WITH ANY APPLICABLE LAND DEVELOPMENT REGULATIONS AND HAS NOT BEEN REVIEWED FOR COMPLIANCE WITH RECORDING REQUIREMENTS FOR PLATS.

CROWN CASTLE
1500 CORPORATE DRIVE
CANONSBURG, PA 15317

SCU #:
494325

NODE #:
SC-NC 0448

A&E PROJECT #:
NEW POLE SET

PROJECT NAME:
FAYETTEVILLE, NC

ADDRESS:
383 FRANKLIN ST
FAYETTEVILLE, NC 28301

ISSUED FOR:

REV	DATE	DRWN	DESCRIPTION	DES./QA
A	3/20/2020	ZTK	PRELIMINARY	GS
B	4/9/2020	ZTK	PRELIMINARY	GS
0	4/20/2020	ZTK	CONSTRUCTION	AJF

PROPOSED POLE DETAILS

DocuSigned by:
Andrew Fandozzi
BAD6066DB9A4...

NORTH CAROLINA PROFESSIONAL SEAL 042222 ENGINEER ANDREW JOSEPH FANDOZZI III

Crown Castle USA Inc. Business License #BD-00410

4/20/2020 | 8:19:25 AM EDT

IT IS A VIOLATION OF LAW FOR ANY PERSON, UNLESS THEY ARE ACTING UNDER THE DIRECTION OF A LICENSED PROFESSIONAL ENGINEER, TO ALTER THIS DOCUMENT.

SHEET NUMBER: C-2
REVISION: 0

DocuSign Envelope ID: 778918B9-1874-41AC-AEE4-E8C33E424250

RF – BILL OF MATERIAL

EXISTING/PROPOSED	CATEGORY (ACTIVE, PASSIVE SHROUD, ANTENNA)	ITEM	MANUFACTURER	MANUFACTURER PART NO.	CROWN IMN/PART NO.	QTY	DESCRIPTION
PROPOSED	ANTENNA	ANTENNA	JMA	CX16M1236-1C	----	1	----
PROPOSED	ACTIVE	RADIO	ERICSSON	4408 B48	----	1	----
PROPOSED	ACTIVE	RADIO	ERICSSON	4449 B5	----	1	----
PROPOSED	ACTIVE	RADIO	ERICSSON	8843 B66	----	1	----
PROPOSED	ACTIVE	RADIO	ERICSSON	PSU AC 02	----	5	----
PROPOSED	SHROUD	SHROUD	NEW YOU MANUFACTURING	SPRS-800	----	2	----

1 BILL OF MATERIALS
SCALE:

NOTE:
THIS MAP MAY NOT BE A CERTIFIED SURVEY AND HAS NOT BEEN REVIEWED BY A LOCAL GOVERNMENT AGENCY FOR COMPLIANCE WITH ANY APPLICABLE LAND DEVELOPMENT REGULATIONS AND HAS NOT BEEN REVIEWED FOR COMPLIANCE WITH RECORDING REQUIREMENTS FOR PLATS.

CROWN CASTLE
1500 CORPORATE DRIVE
CANONSBURG, PA 15317

SCU #:
494325

NODE #:
SC-NC 0448

A&E PROJECT #:
NEW POLE SET

PROJECT NAME:
FAYETTEVILLE, NC

ADDRESS:
383 FRANKLIN ST
FAYETTEVILLE, NC 28301

ISSUED FOR:

REV	DATE	DRWN	DESCRIPTION	DES/QA
A	3/20/2020	ZTK	PRELIMINARY	GS
B	4/9/2020	ZTK	PRELIMINARY	GS
0	4/20/2020	ZTK	CONSTRUCTION	AJF

BILL OF MATERIALS

DocuSigned by:
Andrew Fandozzi
BAD6060D8F4A...

NORTH CAROLINA PROFESSIONAL SEAL 042222 ENGINEER ANDREW JOSEPH FANDOZZI III

Crown Castle USA Inc. Business License #ID-0410

4/20/2020 | 8:19:25 AM EDT

IT IS A VIOLATION OF LAW FOR ANY PERSON, UNLESS THEY ARE ACTING UNDER THE DIRECTION OF A LICENSED PROFESSIONAL ENGINEER, TO ALTER THIS DOCUMENT.

SHEET NUMBER: C-3
REVISION: 0

DocuSign Envelope ID: 778918B9-1874-41AC-AEE4-E8C33E424250

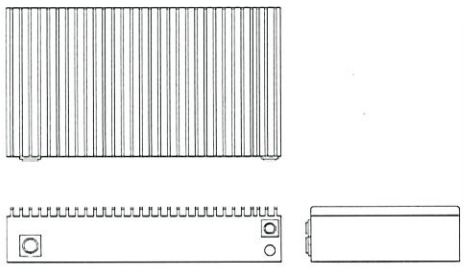

ERICSSON – PSC AC 02
WEIGHT (FULLY EQUIPPED): 11.46 LBS
SIZE (HxWxD): 2.7x12.0x7.0 IN.

1 ERICSSON – PSU AC 02
SCALE: NOT TO SCALE

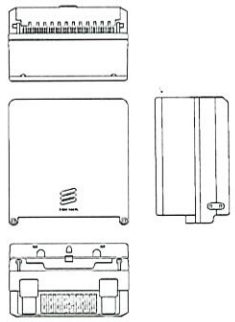

ERICSSON – RADIO 4408
WEIGHT: 10.14 LBS
SIZE (HxWxD): 8.41x7.88x4.13 IN.

2 ERICSSON – RADIO 4408
SCALE: NOT TO SCALE

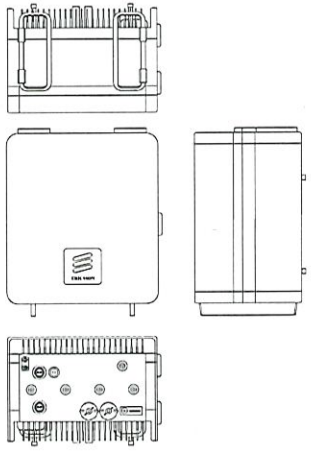

ERICSSON – RADIO 4449 B5
WEIGHT: 70.0 LBS
SIZE (HxWxD): 15.0x13.2x9.3 IN.

3 ERICSSON – RADIO 4449 B5
SCALE: NOT TO SCALE

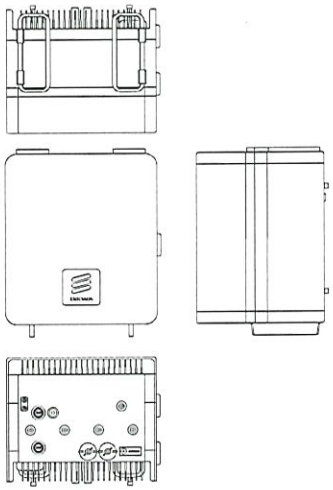

4 ERICSSON – RADIO 8843 B66
SCALE: NOT TO SCALE

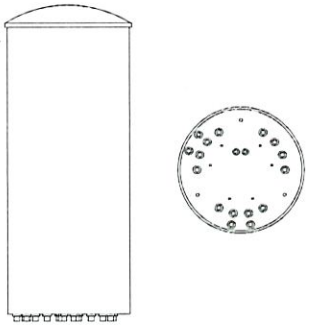

JMA – CX16M1236-1C
WEIGHT (WITHOUT MOUNTING HARDWARE): 35.0 LBS
SIZE (HxD): 33.5x14.0 IN.
VOLUME: 2.98 FT³
(CCI PART #: XXXXXXX)

5 JMA – CX16M1236-1C
SCALE: NOT TO SCALE

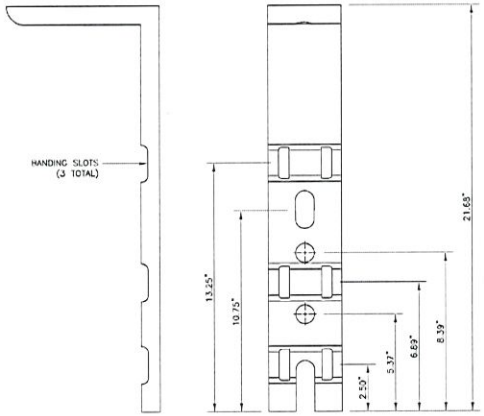

6 NEW YORK MANUFACTURING – ITPB 01
SCALE: NOT TO SCALE

NEW YORK MANUFACTURING – SPRS-809
WEIGHT (FULLY EQUIPPED): 25.0 LBS
SIZE (HxWxD): 30.0x20.0x20.0 IN.

7 NEW YORK MANUFACTURING – SPRS-809
SCALE: NOT TO SCALE

NOTE:
THIS MAP MAY NOT BE A CERTIFIED SURVEY AND HAS NOT BEEN REVIEWED BY A LOCAL GOVERNMENT AGENCY FOR COMPLIANCE WITH ANY APPLICABLE LAND DEVELOPMENT REGULATIONS AND HAS NOT BEEN REVIEWED FOR COMPLIANCE WITH RECORDING REQUIREMENTS FOR PLATS.

CROWN CASTLE
1500 CORPORATE DRIVE
CANONSBURG, PA 15317

SCU #:
494325

NODE #:
SC-NC 0448

A&E PROJECT #:
NEW POLE SET

PROJECT NAME:
FAYETTEVILLE, NC

ADDRESS:
383 FRANKLIN ST
FAYETTEVILLE, NC 28301

ISSUED FOR:

REV	DATE	DRWN	DESCRIPTION	DES./QA
A	3/20/2020	ZTK	PRELIMINARY	GS
B	4/9/2020	ZTK	PRELIMINARY	GS
0	4/20/2020	ZTK	CONSTRUCTION	AJF

RADIO EQUIPMENT SPECS

DocuSigned by:
Andrew Fandozzi
BAD6066DD0024F4...

NORTH CAROLINA PROFESSIONAL SEAL 042222 ENGINEER ANDREW JOSEPH FANDOZZI III

Crown Castle USA Inc. Business License #D-0410

4/20/2020 | 8:19:25 AM EDT

IT IS A VIOLATION OF LAW FOR ANY PERSON, UNLESS THEY ARE ACTING UNDER THE DIRECTION OF A LICENSED PROFESSIONAL ENGINEER, TO ALTER THIS DOCUMENT.

SHEET NUMBER: C-4
REVISION: 0

DocuSign Envelope ID: 778918B9-1874-41AC-AEE4-E8C33E424250

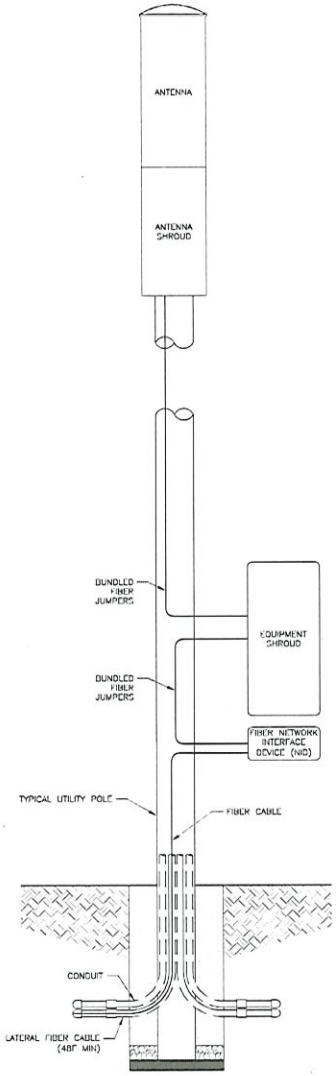

1 UNDERGROUND FIBER RISER DIAGRAM
SCALE: NOT TO SCALE

RF SIGNAGE GUIDELINES
RF SIGNAGE SHOULD FOLLOW THE GUIDELINES BELOW. THESE GUIDELINES INCLUDE COLORS TO ALERT PEOPLE OF THE DANGER AND INFORMATION ABOUT SAFE DISTANCES. SIGNS SHOULD BE PLACED IN READABLE PLACES, IN AREAS WHERE A PERSON CAN READ THEM IN A SAFE LOCATION.

GEN._POP_OK	OCCUP._POP._OK	COLOR	SIGN
YES	YES	GREEN	INFORMATIONAL
NO	YES	BLUE	NOTICE[1]
NO	NO	YELLOW	CAUTION[2]
NO	1.0xNO	RED	WARNING[3]

1. INCLUDE GENERAL POPULATION STAND OFF DISTANCE.
2. INCLUDE BOTH GENERAL POPULATION AND OCCUPATIONAL POPULATION STAND OFF DISTANCES.
3. INCLUDE HEMISPHERIC STAND OFF DISTANCES. ALL WARNING SIGNS MUST BE REVIEWED WITH CROWN CASTLE NATIONAL RF FOR APPROVAL.

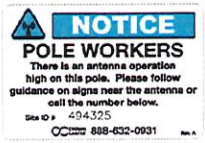

THE NOTICE SIGN MUST BE POSTED NEAR THE BOTTOM OF THE POLE OR ON THE SHROUD ANY TIME THERE IS A ZONE NEAR THE ANTENNA THAT EXCEEDS THE GENERAL POPULATION (GP) LIMIT. IF THERE ARE NO ZONES THAT EXCEED THE GP LIMIT THAN THE "NOTICE" SIGN SHOULD NOT BE USED.

RF "NOTICE" SIGN AVAILABLE IN 4"x6" METAL OR 4"x6" ADHESIVE BACKED LABEL

THE "INFORMATION" SIGN MUST BE POSTED ON OR NEAR THE ANTENNA WHENEVER THE GENERAL PUBLIC LIMIT IS NOT EXCEEDED. THIS SIGN SHOULD BE USED ALONE ON ALL SITES THAT HAVE NO AREAS WHERE THE GP LIMIT IS EXCEEDED.

RF INFORMATION SIGN AVAILABLE IN 4"x6" ADHESIVE BACKED LABEL OR, UPON REQUEST, IN A 4"X6" PLASTIC PLACARD.

THE "CAUTION" SIGN MUST BE POSTED ON THE ANTENNA ANY TIME THERE IS AN AREA THAT EXCEEDS THE GENERAL PUBLIC EXPOSURE LIMIT. THE KEEP-BACK DISTANCE FOR THE GP MUST BE FILLED IN ON THE SIGN. THE EME REPORT MUST CLEARLY STATE THAT GENERAL PUBLIC LIMIT KEEP BACK DISTANCE WHEN IT IDENTIFIES THIS SIGN FOR POSTING.

RF "CAUTION" SIGN AVAILABLE IN 8"x8" ADHESIVE BACKED LABEL OR, UPON REQUEST, IN A 8"x8" PLASTIC PLACARD. ADHESIVE SHOULD BE USED WHEN PLACING DIRECTLY ON THE ANTENNA.

SCS MARKETING AND ID SIGN AVAILABLE IN 4"x6" METAL OR 4"x6" ADHESIVE BACKED LABEL.

2 SIGN DETAILS
SCALE: NOT TO SCALE

NOTE:
THIS MAP MAY NOT BE A CERTIFIED SURVEY AND HAS NOT BEEN REVIEWED BY A LOCAL GOVERNMENT AGENCY FOR COMPLIANCE WITH ANY APPLICABLE LAND DEVELOPMENT REGULATIONS AND HAS NOT BEEN REVIEWED FOR COMPLIANCE WITH RECORDING REQUIREMENTS FOR PLATS.

CROWN CASTLE
1500 CORPORATE DRIVE
CANONSBURG, PA 15317

SCU #:
494325

NODE #:
SC-NC 0448

A&E PROJECT #:
NEW POLE SET

PROJECT NAME:
FAYETTEVILLE, NC

ADDRESS:
383 FRANKLIN ST
FAYETTEVILLE, NC 28301

ISSUED FOR:

REV	DATE	DRWN	DESCRIPTION	DES./QA
A	3/20/2020	ZTK	PRELIMINARY	GS
B	4/9/2020	ZTK	PRELIMINARY	GS
0	4/20/2020	ZTK	CONSTRUCTION	AJF

FIBER RISER DIAGRAMS & RF SIGNAGE DETAILS

DocuSigned by:
Andrew Fandozzi
BAD6080DDB4A4...

NORTH CAROLINA PROFESSIONAL SEAL 042222 ENGINEER ANDREW JOSEPH FANDOZZI III

Crown Castle USA Inc. Business License #D-0430

4/20/2020 | 8:19:25 AM EDT

IT IS A VIOLATION OF LAW FOR ANY PERSON, UNLESS THEY ARE ACTING UNDER THE DIRECTION OF A LICENSED PROFESSIONAL ENGINEER, TO ALTER THIS DOCUMENT.

SHEET NUMBER: C-5
REVISION: 0

DocuSign Envelope ID: 778918B9-1874-41AC-AEE4-E8C33E424250

PANEL A

MAIN: 100 ML BACK-FED W/ 60A BREAKER	SCCR: 10,000 AMPS
VOLTAGE/PHASE: 120/240V, 1-PHASE, 3-WIRE	ENCLOSURE: NEMA 3R
MANUFACTURER: SQUARE D	MOUNTING: SURFACE
MODEL NUMBER: Q01DM10030TRBR	SURGE PROTECTION DEVICE: NO

DESCRIPTION	C/B	C or NC	CIR. NO.	LOAD (VA) A - PHASE	LOAD (VA) B - PHASE
MAIN BREAKER	60				
PSU AC 02	15	C	1	720	
PSU AC 02	15	C	2		720
PSU AC 02	15	C	3	720	
PSU AC 02	15	C	4		720
PSU AC 02	15	C	5	720	
BLANK		NC	6		0
		NC	7	0	
		NC	8		0
BASE LOAD (VA) =				2160	1440
25% OF CONTINUOUS LOAD (VA) =				540	360
TOTAL LOAD (VA) =				2700	1800
TOTAL LOAD (A) =				23	15

C = CONTINUOUS LOAD; NC = NON-CONTINUOUS LOAD

** IDICATES NEW LOAD. ALL OTHER LOADS ARE EXISTING. REPLACE OR INSTALL NEW BREAKER AS NECESSARY. NEW BREAKERS TO BE SAME TYPE AND AIC RATING AS EXISTING.

1 PANEL SCHEDULE
SCALE: NOT TO SCALE

2 DO NOT USE
SCALE: NOT TO SCALE

CONDUCTOR SCHEDULE [1][2][3]

SYMBOL	CIRCUIT AMPERAGE	MINIMUM CONDUCTOR SIZE	MINIMUM SIZE GROUND
015_G	15	#14	#14
020_G	20	#12	#12
030_G	30	#10	#10
040_G	40	#8	#10
050_G	50	#6	#10
060_G	60	#6	#10

NOTES [ ]:

[1] ALL CONDUCTORS ARE COPPER.
[2] ALL CONDUCTOR INSULATION TO BE TYPE THHW, THWN, THWN-2, XHHW, OR XHHW-2 INSULATION (WET LOCATION).
[3] FULL SIZE NEUTRAL CONDUCTOR UNLESS NOTED OTHERWISE.

1/50GX
- INDICATES AMPERAGE OF CIRCUIT (3 DIGITS)
- G INDICATES WITH GROUND AND ABSENCE OF G INDICATES WITHOUT GROUND
- X INDICATES WITHOUT NEUTRAL
- INDICATES NUMBER OF UNGROUNDED CONDUCTORS (i.e. HOT) – EITHER 1, 2, OR 3

UTILITY FEED (SIZED FOR 3% VOLTAGE DROP AT 120V)

RUN	TOTAL CONDUCTOR LENGTH (ft)	NUMBER & SIZE OF CONDUCTORS	MINIMUM CONDUIT SIZE (in)
RUN 1	0–75	(2) #6	1
	76–120	(2) #4	1
	121–150	(2) #3	1-1/4
	151–190	(2) #2	1-1/4
	191–240	(2) #1	1-1/2
	241–300	(2) 1/0	1-1/2
	301–380	(2) 2/0	1-1/2
	381–490	(2) 3/0	2
	491–615	(2) 4/0	2

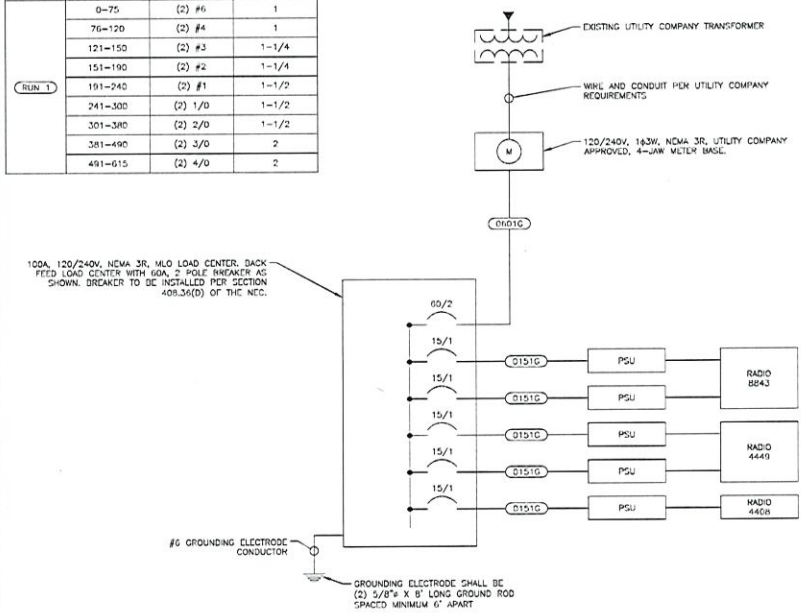

3 ELECTRICAL SCHEMATIC
SCALE: NOT TO SCALE

NOTE:
THIS MAP MAY NOT BE A CERTIFIED SURVEY AND HAS NOT BEEN REVIEWED BY A LOCAL GOVERNMENT AGENCY FOR COMPLIANCE WITH ANY APPLICABLE LAND DEVELOPMENT REGULATIONS AND HAS NOT BEEN REVIEWED FOR COMPLIANCE WITH RECORDING REQUIREMENTS FOR PLATS.

CROWN CASTLE
1500 CORPORATE DRIVE
CANONSBURG, PA 15317

SCU #:
494325

NODE #:
SC-NC 0448

A&E PROJECT #:
NEW POLE SET

PROJECT NAME:
FAYETTEVILLE, NC

ADDRESS:
383 FRANKLIN ST
FAYETTEVILLE, NC 28301

ISSUED FOR:

REV	DATE	DRWN	DESCRIPTION	DES./QA
A	3/20/2020	ZTK	PRELIMINARY	GS
B	4/9/2020	ZTK	PRELIMINARY	GS
0	4/20/2020	ZTK	CONSTRUCTION	AJF

ELECTRICAL PANEL, SPEC, SCHEDULE & SCHEMATIC

DocuSigned by:
Andrew Fandozzi
BAD6008D2B0A4F...

NORTH CAROLINA PROFESSIONAL SEAL 042222 ENGINEER ANDREW JOSEPH FANDOZZI III

Crown Castle USA Inc. Business License #D-0436

4/20/2020 | 8:19:25 AM EDT

IT IS A VIOLATION OF LAW FOR ANY PERSON, UNLESS THEY ARE ACTING UNDER THE DIRECTION OF A LICENSED PROFESSIONAL ENGINEER, TO ALTER THIS DOCUMENT.

SHEET NUMBER: E-1
REVISION: 0

DocuSign Envelope ID: 778918B9-1874-41AC-AEE4-E8C33E424250

GENERAL GROUND AND BONDING NOTES:

1. GROUNDING RISER FOR DIAGRAMMATIC PURPOSES ONLY. REFERE TO CROWN CASTLE GROUNDING AND BONDING STANDARD 337910. SEE ELEVATION DRAWING FOR EQUIPMENT AND ANTENNA LOCATIONS.
2. CONTRACTOR TO INSTALL GROUNDING KITS ON ALL COAXIAL CABLES WHEN APPLICABLE.
3. METAL TO METAL CONTACT IS NOT ALLOWED WITHOUT AN INTENTIONAL BOND.
4. DISSIMILAR METALS IN DIRECT CONTACT, CAUSES CHEMICAL REACTION BETWEEN THE METALS, LEADING TO CORROSION.
5. ALL ABOVE GROUND CONNECTIONS TO THE VERTICAL GROUND RISER (VGR) SHALL BE IRREVERSIBLE CLAMP TYPE AND WEATHER PROOFED.
6. WHERE APPLICABLE EARTH GROUND RESISTANCE OF 5 OHMS OR LESS IS PREFERRED. 25 OHMS IS ACCEPTABLE (SEE NEW 250.53.)
7. ALL METALLIC SURFACES AND/OR GROUND COMPONENTS INSTALLED W/IN 6' OF EACH OTHER MUST BE PROPERLY BONDED TO VGR., INCLUDING BUT NOT LIMITED TO, RADIO SHROUD, ANTENNA BRACKETS, STREET LIGHTS AND THE DISCONNECT OF AC SERVICE.
8. COAXIAL CABLES SHALL BE GROUNDED USING A GROUND KIT INSTALLED BEFORE THE DRIP LOOP AT THE ENTRY TO THE RADIO CABINET. FOR TOP ENTRY RADIOS WHERE RF SURGE PROTECTIVE DEVICES (SPDs) ARE INSTALLED, GROUND THE SPD WILL SUFFICE.
9. ALL POLE MOUNTED DEVICES, INCLUDING BUT NOT LIMITED TO, ANTENNA MOUNTS, ANTENNAS WITH FACTORY GROUND TERMINAL, MOUNTING BRACKETS, AND RADIO EQUIPMENT CABINETS SHALL BE BONDED WITH A #6 AWG STRAP/JUMPER TO THE MAIN VGR CONDUCTOR WITH IRREVERSIBLE COMPRESSION CLAMPS. PROPER CRIMPING TOOLS ARE REQUIRED. INSTALL BONDING JUMPER TO THE VGR WITH MINIMUM 8" BENDING RADIUS AND IN A DOWNWARD DIRECTION TOWARD TO MGB AND ITS ASSOCIATED SITE GROUND BOND. AVOID GROUND LOOPS FROM THE EQUIPMENT CHASSIS TO THE CONDUCTIVE SHROUD VIA NON CONDUCTIVE MOUNTING PLATE.
10. FOR A CONDUCTIVE POLE, ALL METALLIC COMPONENTS AND THE CONDUCTIVE POLE ITSELF SHOULD HAVE AN INTENTIONAL BOND TO THE VGR AND BETWEEN ALL COMPONENTS. FOR ELECTRIC METERS SERVICE DISCONNECT AND RADIO EQUIPMENT INSTALLED ON CONDUCTIVE POLES, AVOID UNINTENTIONAL BONDING THROUGH THE CHASSIS AND THE METAL POLE BY INSTALLING NON-CONDUCTIVE ATTACHMENT HARDWARE AND A NON-CONDUCTIVE BACKING PLATE BETWEEN ENERGIZED EQUIPMENT AND A CONDUCTIVE SHROUD BODY. THE METER CHASSIS AND/OR SERVICE DISCONNECT IS TO BE BONDED IN ACCORDANCE TO LOCAL, NATIONAL ELECTRICAL CODES. DO NOT ALLOW THE CLAMP ON VGR TO HAVE INTENTIONAL CONTACT WITH THE CONDUCTIVE POLES.
11. WHEN SITE IS POWERED UP, BEFORE ACCEPTANCE, TEST FOR DIRECTIONABLE CURRENT AND FOREIGN VOLTAGE.

    SEE NEC CODE 250.24(A)(1) FOR NEUTRAL GROUND BONDING CONNECTION
12. IF UTILITY GROUND IS PRESENT, INSTALL #6 COPPER BOND BETWEEN UTILITY COMPANY GROUND AND THE VGR.
13. CONTRACTOR SHALL FOLLOW ALL APPLICABLE CROWN CASTLE SMALL CELL DESIGN AND CONSTRUCTION STANDARDS. REFERENCE 337910 GROUNDING AND BONDING REQUIREMENTS FOR SMALL CELL NODES (sDAS).

STEP WHEN APPROACHING POLE:

1. CHECK FOR CONTACT VOLTAGE
2. PERFORM VISUAL INSPECTION THAT MATERIALS CAN CARRY CURRENT ARE PROPERLY BONDED.
3. TEST GROUNDING SYSTEM.
4. ONLY QUALIFIED TRAINED PERSONNEL SHOULD WORK ON THE NODE.
5. FOLLOW APPROVED CONSTRUCTION DRAWINGS. SPECIFIC OEM PRODUCT MANUALS, PANS, MOPS, & SOW.

RELATED DOCUMENTS:

1. NATIONAL ELECTRIC SAFETY CODE (NESC)
2. NATIONAL ELECTRIC CODE (NEC)
3. LOCAL POWER UTILITY STANDARDS
4. LOCAL POLE OWNER STANDARDS
5. LOCAL MUNICIPAL STANDARDS

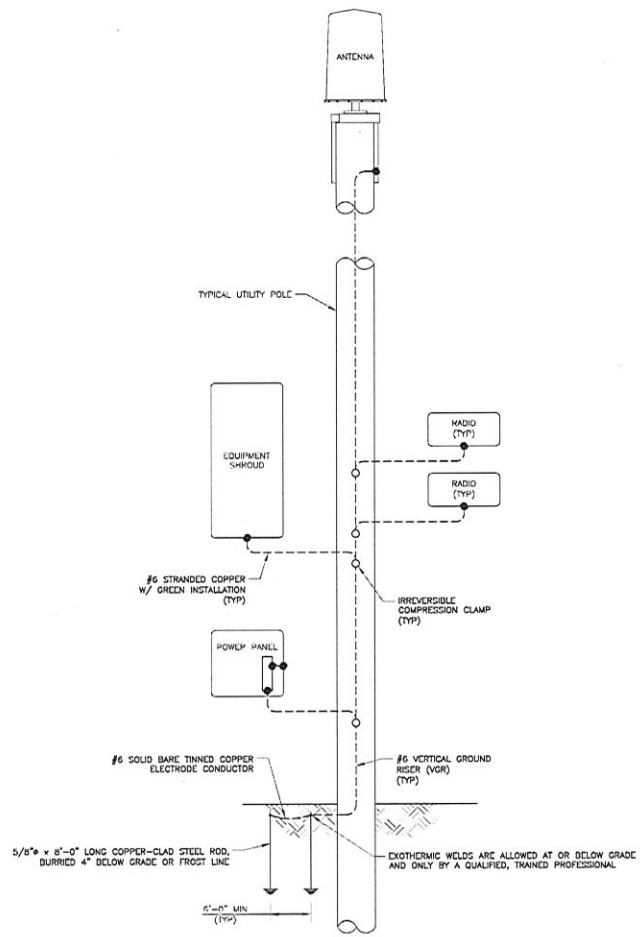

1 GROUNDING RISER DIAGRAM
SCALE: NOT TO SCALE

GROUNDING PLAN LEGEND:

- ○ COMPRESSION CONNECTION
- ■ EXOTHERMIC WELD
- ● MECHANICAL CONNECTION

NOTE:

THIS MAP MAY NOT BE A CERTIFIED SURVEY AND HAS NOT BEEN REVIEWED BY A LOCAL GOVERNMENT AGENCY FOR COMPLIANCE WITH ANY APPLICABLE LAND DEVELOPMENT REGULATIONS AND HAS NOT BEEN REVIEWED FOR COMPLIANCE WITH RECORDING REQUIREMENTS FOR PLATS.

CROWN CASTLE
1500 CORPORATE DRIVE
CANONSBURG, PA 15317

SCU #:
494325

NODE #:
SC-NC 0448

A&E PROJECT #:
NEW POLE SET

PROJECT NAME:
FAYETTEVILLE, NC

ADDRESS:
383 FRANKLIN ST
FAYETTEVILLE, NC 28301

ISSUED FOR:

REV	DATE	DRWN	DESCRIPTION	DES./QA
A	3/20/2020	ZTK	PRELIMINARY	GS
B	4/9/2020	ZTK	PRELIMINARY	GS
0	4/20/2020	ZTK	CONSTRUCTION	AJF

GROUNDING RISER DIAGRAM

DocuSigned by:
Andrew Fandozzi
BAD6060D8F7A4...

NORTH CAROLINA PROFESSIONAL SEAL 042222 ENGINEER ANDREW JOSEPH FANDOZZI III

Crown Castle USA Inc. Business License #D-0430

4/20/2020 | 8:19:25 AM EDT

IT IS A VIOLATION OF LAW FOR ANY PERSON, UNLESS THEY ARE ACTING UNDER THE DIRECTION OF A LICENSED PROFESSIONAL ENGINEER, TO ALTER THIS DOCUMENT.

SHEET NUMBER: G-1

REVISION: 0

DocuSign Envelope ID: 778918B9-1874-41AC-AEE4-E8C33E424250

1 EXISTING
SCALE: NOT TO SCALE

2 PROPOSED
SCALE: NOT TO SCALE

NOTE:
THIS MAP MAY NOT BE A CERTIFIED SURVEY AND HAS NOT BEEN REVIEWED BY A LOCAL GOVERNMENT AGENCY FOR COMPLIANCE WITH ANY APPLICABLE LAND DEVELOPMENT REGULATIONS AND HAS NOT BEEN REVIEWED FOR COMPLIANCE WITH RECORDING REQUIREMENTS FOR PLATS.

CROWN CASTLE
1500 CORPORATE DRIVE
CANONSBURG, PA 15317

SCU #:
494325

NODE #:
SC-NC 0448

A&E PROJECT #:
NEW POLE SET

PROJECT NAME:
FAYETTEVILLE, NC

ADDRESS:
383 FRANKLIN ST
FAYETTEVILLE, NC 28301

ISSUED FOR:

REV	DATE	DRWN	DESCRIPTION	DES./QA
A	3/20/2020	ZTK	PRELIMINARY	GS
B	4/9/2020	ZTK	PRELIMINARY	GS
0	4/20/2020	ZTK	CONSTRUCTION	AJF

PHOTO SIMULATION

DocuSigned by:
Andrew Fandozzi
BAD6066DD9024F4...

NORTH CAROLINA PROFESSIONAL SEAL 042222 ENGINEER ANDREW JOSEPH FANDOZZI III

Crown Castle USA Inc. Business License #D-0450

4/20/2020 | 8:19:25 AM EDT

IT IS A VIOLATION OF LAW FOR ANY PERSON, UNLESS THEY ARE ACTING UNDER THE DIRECTION OF A LICENSED PROFESSIONAL ENGINEER, TO ALTER THIS DOCUMENT.

SHEET NUMBER: P-1

REVISION: 0

DocuSign SECURED

Certificate Of Completion

Envelope Id: 778918B9187441ACAEE4E8C33E424250
Subject: Please DocuSign: SC-NC 0448_494325_FAYETTEVILLE_REV0_4.20.2020.pdf
Source Envelope:
Document Pages: 11
Certificate Pages: 3
AutoNav: Enabled
EnvelopeId Stamping: Enabled
Time Zone: (UTC-05:00) Eastern Time (US & Canada)

Signatures: 11
Initials: 0

Status: Completed

Envelope Originator:
Jordan Stanga
2000 Corporate Drive
Canonsburg, PA 15317
Jordan.Stanga@crowncastle.com
IP Address: 64.213.130.12

Record Tracking

Status: Original
4/20/2020 8:06:02 AM

Holder: Jordan Stanga
Jordan.Stanga@crowncastle.com

Location: DocuSign

Signer Events	Signature	Timestamp
Andrew Fandozzi andrew.fandozzi@crowncastle.com Senior Project Engineer Crown Castle Security Level: Email, Account Authentication (None)	DocuSigned by: Andrew Fandozzi BAD6066DD9024F4...	Sent: 4/20/2020 8:08:01 AM Viewed: 4/20/2020 8:12:13 AM Signed: 4/20/2020 8:19:25 AM
	Signature Adoption: Pre-selected Style Using IP Address: 8.20.92.226	

Electronic Record and Signature Disclosure:
Accepted: 9/19/2018 4:34:52 PM
ID: f2ed47eb-033d-474f-9630-ed0a433825ca

In Person Signer Events	Signature	Timestamp

Editor Delivery Events	Status	Timestamp

Agent Delivery Events	Status	Timestamp

Intermediary Delivery Events	Status	Timestamp

Certified Delivery Events	Status	Timestamp

Carbon Copy Events	Status	Timestamp

Witness Events	Signature	Timestamp

Notary Events	Signature	Timestamp

Envelope Summary Events	Status	Timestamps
Envelope Sent	Hashed/Encrypted	4/20/2020 8:08:01 AM
Certified Delivered	Security Checked	4/20/2020 8:12:13 AM
Signing Complete	Security Checked	4/20/2020 8:19:25 AM
Completed	Security Checked	4/20/2020 8:19:25 AM

Payment Events	Status	Timestamps

Electronic Record and Signature Disclosure

ELECTRONIC RECORD AND SIGNATURE DISCLOSURE

In order to provide more efficient and faster service, Crown Castle ("we", "us" or "company") is pleased to announce the use of DocuSign, Inc. ("DocuSign") electronic signing system. The terms for providing such documents for execution and various other documents and records to you electronically through DocuSign are set forth below. Please read the information below carefully and if you can satisfactorily access this information electronically and agree to these terms, please confirm your agreement by clicking the "I agree" button at the bottom of this document.

Getting paper copies

At any time, you may request from us a paper copy of any document for execution or other document or record provided or made available electronically to you by us. You will be able to download and print documents we send to you through the DocuSign system during and immediately after each signing session and, if you elect to create a DocuSign signer account, you may access them for a limited period of time thereafter. To request paper copies of documents previously provided by us to you electronically, send an e-mail to esignature@CrownCastle.com, requesting the subject paper copies and stating your e-mail address, name, US Postal address and telephone number.

Withdrawing your consent to receive and/or execute documents electronically

If you elect to receive documents for execution and various other documents and records from us electronically, you may at any time change your mind and tell us that thereafter you want to receive such documents only in paper format. To withdraw your consent to electronic delivery and execution of documents, use the DocuSign 'Withdraw Consent' form on the signing page of a DocuSign envelope, instead of signing it. Thereafter, you will no longer be able to use the DocuSign system to electronically receive and execute documents or other records from us. You may also send an e-mail to esignature@CrownCastle.com stating that you are withdrawing your consent to electronic delivery and execution of documents through the DocuSign system and stating your e-mail address, name, US Postal Address, and telephone number.

Consequences of withdrawing consent to receive and/or execute documents electronically

If you elect to receive documents for execution and various other documents and other records only in paper format, it will slow the speed at which we can complete the subject transactions because of the increased delivery time.

Documents for execution, and other documents and records may be sent to you electronically

Unless you tell us otherwise in accordance with the procedures described herein, we may provide documents for execution, and other documents and records electronically to you through the DocuSign system during the course of our relationship with you. To reduce the chance of you inadvertently not receiving any document for execution or other document or record, we prefer to provide all documents for execution, and other documents and records by the same method and to the same address that you have given us. If you do not agree with this process, please let us know as described below.

How to contact Crown Castle

You may contact us to let us know of any changes related to contacting you electronically, to request paper copies of documents for execution and other documents and records from us, and to withdraw your prior consent to receive documents for execution and other documents and records electronically as follows:

To contact us by phone call: 724-416-2000
To contact us by email, send messages to: esignature@CrownCastle.com
To contact us by paper mail, send correspondence to
Crown Castle
2000 Corporate Drive
Canonsburg, PA 15317

To advise Crown Castle and DocuSign of your new e-mail address

To let us know of a change to the e-mail address where we should send documents for execution and other documents and records to you, you must send an email message to esignature@CrownCastle.com and state your previous e-mail address and your new e-mail address.

In addition, you must notify DocuSign, Inc. to arrange for your new email address to be reflected in your DocuSign account by following the process for changing e-mail in the DocuSign system.

Required hardware and software

Browsers:	Internet Explorer® 11 (Windows only); Windows Edge Current Version; Mozilla Firefox Current Version; Safari™ (Mac OS only) 6.2 or above; Google Chrome Current Version; **Note** : Pre-release (e.g., beta) versions of operating systems and browsers are not supported.
Mobile Signing:	Apple iOS 7.0 or above; Android 4.0 or above
PDF Reader:	Acrobat® Reader or similar software may be required to view and print PDF files
Screen Resolution:	1024 x 768

Enabled Security Settings:	Allow per session cookies

These minimum requirements are subject to change. If these requirements change, you will be asked to re-accept the disclosure. Pre-release (e.g. beta) versions of operating systems and browsers are not supported.

Acknowledging your access and consent to receive documents electronically

Please confirm that you were able to access this disclosure electronically (which is similar to the manner in which we will deliver documents for execution and other documents and records) and that you were able to print this disclosure on paper or electronically save it for your future reference and access or that you were able to e-mail this disclosure to an address where you will be able to print it on paper or save it for your future reference and access. Further, if you consent to receiving documents for execution and other documents and records in electronic format on the terms described above, please let us know by clicking the "I agree" button below.

By checking the 'I agree' box, I confirm that:

- You can access and read this Electronic Record and Signature Disclosure; and
- As a recipient, you can read, electronically sign and act upon this message, and you agree not to forward it or any other DocuSign e-mail communications. In the event another party needs to be added to the DocuSign communication, you must make a request to the e-mail originator.

TKK Engineering PC / NB+C ES

Proposed Pole with Antenna and Equipment

Prepared for Crown Castle – Fayetteville, NC

SITE INFORMATION

Address	383 Franklin Street
	Fayetteville, NC 28301
	Lat: 35.052511°, Long: -78.882792°
Crown Castle Name	SC-NC 0448
SCU Number	494325
NB+C Project Number	100650
Date	April 17, 2020

Analysis Results: Passing

4435 Waterfront Drive | Suite 100 | Glen Allen, VA | 23060 | 804.548.4079

April 17, 2020

Michele Turner
Crown Castle
6801-A Northpark Blvd
Charlotte, NC 28216

TKK ES/NB+C ES
4435 Waterfront Drive
Suite 100
Glen Allen, VA 23060

Subject: Structural Analysis Report – New Build

Per your request, *TKK Engineering PC / Network Building + Consulting Engineering Services* ("TKK ES/NB+C ES") is pleased to submit this **"Structural Analysis Report"** to determine the structural integrity of the proposed concrete pole listed on Table 1 below to withstand Verizon proposed loading listed in Table 2 of this report. Information we received for this analysis includes:

- Construction Drawings prepared by Crown Castle dated April 9, 2020
- Pole Design Drawings by Stresscrete Group dated March 10, 2020

Table 1 – Proposed Concrete Pole

Pole Length (Ft)	Pole Height above Grade (ft)	Embedment Depth (ft)	% Structural Capacity (worst case loading)	% Foundation Capacity (worst case loading	Pass / Fail
46	39.0	7.0	28.1	90.4	Pass

Table 2 – Verizon Proposed Loading

Carrier	Number of Appurtenances	Antenna Model	Note
Verizon	1	JMA Wireless Antenna Model:CX16MI236-1C	RAD – 42'- 0"
	2	NYM SPRS-809 Equipment Shroud (1) Ericsson 8843 B66 Radio (1) Ericsson 4449 B5 Radio (1) Ericsson 4408 B48 Radio (5) PSU AC 02	-

ASSUMPTIONS

The analysis contained within this report is based on the pole capacity as prescribed in the governing codes. The validity and accuracy of the analysis within is limited by the accuracy of the information it is based on. The structural analysis is based on the following assumptions.

1. This report makes no warranties, expressed and/or implied, and disclaims any liability arising from material, fabrication and erection of the structure and any other existing or proposed components or appurtenances.
2. All proposed antennas, mounts, coaxial cables and appurtenances are assumed to be properly installed and configured according to manufacturer requirements.
3. All structural elements are assumed to be in place and in good condition and were previously designed and constructed in accordance with applicable codes and standards.
4. All proposed attachment height and pole modifications can be viewed in the accompanied construction drawings.
5. The existing soil was assumed to be silty clay with an approximate allowable lateral passive pressure of 300 psf per foot of depth.
6. Contractor to verify existing site condition prior to fabrication and construction. In the event the existing conditions are different than the assumptions made in this report, this must be brought to the structural engineer's attention before proceeding any further with bidding, fabrication and/or erection.

If any of these assumptions is not valid or has been made in error, this analysis may be affected, and TKK ES/*NB+C ES* should be allowed to review any new information to determine its effect on the structural integrity of the tower.

APPLICABLE CODES AND STANDARDS

The existing structure was analyzed/designed per the provisions of following applicable codes and standards:

- *The 2018 North Carolina Building Code adopting 2015 IBC with amendments*
- *ANSI/TIA-222-H – Structural Standards for Antenna Supporting Structures and Antennas w/ Addendums 1 and 2*
- *Minimum Design Loads for Buildings and Other Structures ASCE/SEI 7-16*

ANALYSIS

Design Loads:

- Exposure Category: B
- Ice Thickness: 1.5 in
- Design Wind Speed: 94 mph

CONCLUSION

Based on the performed analysis on the existing structures for applicable gravity and lateral loads, we have determined that the proposed concrete Pole is **sufficient** to support the proposed loading. The results of our analysis for 46ft concrete pole (worst case loading) are included in the attached documentation.

The results of the report show that the additional loads induced on the proposed structure due to proposed equipment installation are within acceptable limits considering the overall configuration of the support structure, therefore the proposed installation may proceed.

The conclusions reached by **TKK ES/NBC+ES** in this report are only applicable for the previously mentioned existing structural members supporting the Verizon telecommunications equipment. Further, no structural qualification is made or implied by this report for existing structural members not supporting the Verizon equipment.

TKK ENGINEERING PC / NB+C ENGINEERING SERVICES

Prepared by: Charles Brooks EIT
Respectfully submitted by:

Krupakaran Kolandaivelu, PE
Chief Engineer-Structural
NC PE License #039073
NC FIRM LICENSE #C-4682

4/17/2020

Pole Num:	**0448**	Pole Length / Class:	**46 / F**	Code:	**NESC**	Structure Type:	**Unguyed Tangent**
Aux Data 1	**Unset**	Material:	**Concrete**	NESC Rule:	**Rule 250C**	Status	**Unguyed**
Aux Data 2	**Unset**	Setting Depth (ft):	**7.00**	Construction Grade:	**C**	Pole Strength Factor:	**1.00**
Aux Data 3	**Unset**	G/L Circumference (in):	**41.97**	Loading District:	**Special**	Transverse Wind LF:	**0.87**
Aux Data 4	**Unset**	--	**--**	Ice Thickness (in):	**0.00**	Wire Tension LF:	**1.00**
Aux Data 5	**Unset**	--	**--**	Wind Speed (mph):	**94.00**	Vertical LF:	**1.00**
Aux Data 6	**Unset**	--	**--**	Wind Pressure (psf):	**22.62**	Max 250C Wind (mph)	**189.62**
Latitude:		**0.000000 Deg**	Longitude:		**0.000000 Deg**	Elevation:	**0 Feet**

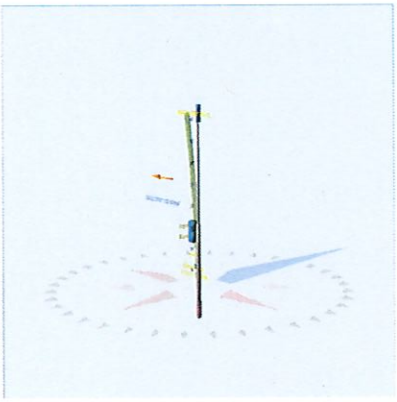

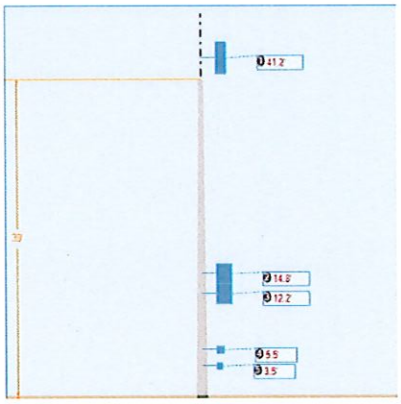

Pole Capacity Utilization (%)		Height (ft)	Wind Angle (deg)
Maximum	**28.1**	0.0	270.0
Groundline	**28.1**	0.0	268.4
Vertical	**0.1**	12.0	270.0

Pole Moments (ft-lb)		Load Angle (deg)	Wind Angle (deg)
Max Cap Util	**18,836**	270.0	270.0
Groundline	**18,836**	270.0	268.4
GL Allowable	**68,317**		
Overturn	**97,117**		

Groundline Load Summary - Reporting Angle Mode: Load - Reporting Angle: 270.0°

	Shear Load* (lbs)	Applied Load (%)	Bending Moment (ft-lb)	Applied Moment (%)	Pole Capacity (%)	Bending Stress (+/- psi)	Vertical Load (lbs)	Vertical Stress (psi)	Total Stress (psi)	Pole Capacity (%)
GenericEquipments	322	36.0	**7,927**	42.1	**11.6**	**369**	308	2	**371**	**10.6**
ConcretePoles	573	64.0	**10,909**	57.9	**16.0**	**507**	1,308	9	**516**	**14.7**
Pole Load	896	100.0	**18,836**	100.0	**27.6**	**876**	1,616	12	**887**	**25.3**
Pole Reserve Capacity			**49,481**		**72.4**	**2,627**			**2,615**	**74.7**

Load Summary by Owner - Reporting Angle Mode: Load - Reporting Angle: 270.0°

	Shear Load* (lbs)	Applied Load (%)	Bending Moment (ft-lb)	Applied Moment (%)	Pole Capacity (%)	Bending Stress (+/- psi)	Vertical Load (lbs)	Vertical Stress (psi)	Total Stress (psi)	Pole Capacity (%)
<Undefined>	322	36.0	**7,927**	42.1	**11.6**	**369**	308	2	**371**	**10.6**
Crown Castle	573	64.0	**10,909**	57.9	**16.0**	**507**	1,308	9	**516**	**14.7**
Totals:	896	100.0	**18,836**	100.0	**27.6**	**876**	1,616	12	**887**	**25.3**

Detailed Load Components:

GenericEquipment		Owner	Height (ft)	Horiz. Offset (in)	Offset Angle (deg)	Rotate Angle (deg)	Unit Weight (lbs)	Unit Height (in)	Unit Depth (in)	Unit Diameter (in)	Unit Length (in)	Offset Moment* (ft-lb)	Wind Moment* (ft-lb)	Moment at GL* (ft-lb)
Cylinder	JMA CX16M1236-1C		41.22	0.95	0.0	0.0	35.00	48.50	--	14.00	--	0	3,784	3,784
Box	Equipment		12.25	21.60	270.0	0.0	129.00	30.00	20.00	--	20.00	232	1,293	1,525
Box	Equipment		14.75	21.38	270.0	0.0	129.00	30.00	20.00	--	20.00	230	1,557	1,787
Box	Disconnect		5.50	9.20	180.0	0.0	10.00	12.00	6.00	--	10.00	0	70	70
Box	UTILITY METER		3.50	8.12	180.0	0.0	5.00	10.88	3.50	--	8.00	0	23	23
											Totals:	**462**	**6,727**	**7,189**

O-Calc® Pro Capacity Summary Info

Pole Identification: 0448

Report Created: 4/17/2020

File: Pole_0448_conx.pplx

28.1% of Allowed MCU

Unguyed

	Groundline		Max Cap Util	
Moment	18,836 ft-lb		18,836 ft-lb	
	%	Height	Wind Angle	Load Angle
Max	28.1	0.0 ft	270.0°	270.0°
GL	28.1	0.0 ft	268.4°	270.0°
Buckling	0.1	12.0 ft	270.0°	

Unguyed

O-Calc® Pro Schematic View

Pole Identification: 0448

Report Created: 4/17/2020

File: Pole_0448_conx.pplx

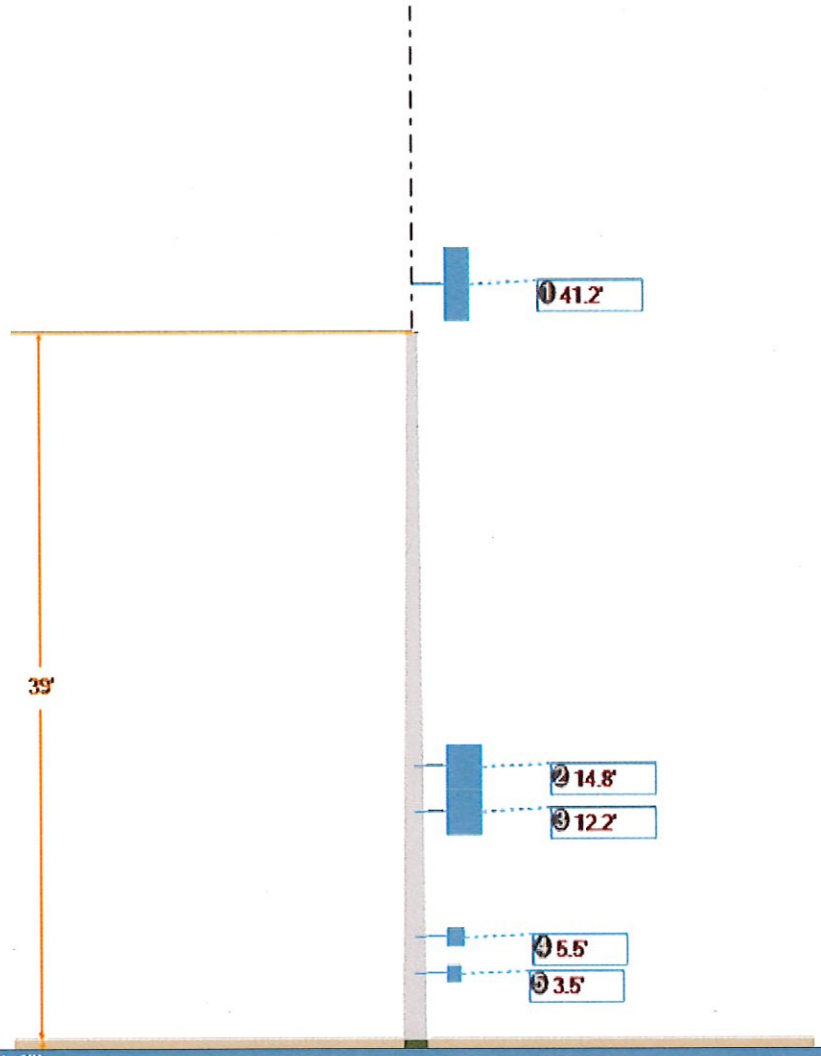

1 - 41.2' (494.6") Antenna
2 - 14.8' (177") Equipment
3 - 12.2' (147") Equipment
4 - 5.5' (66") Disconnect
5 - 3.5' (42") Equipment

0448

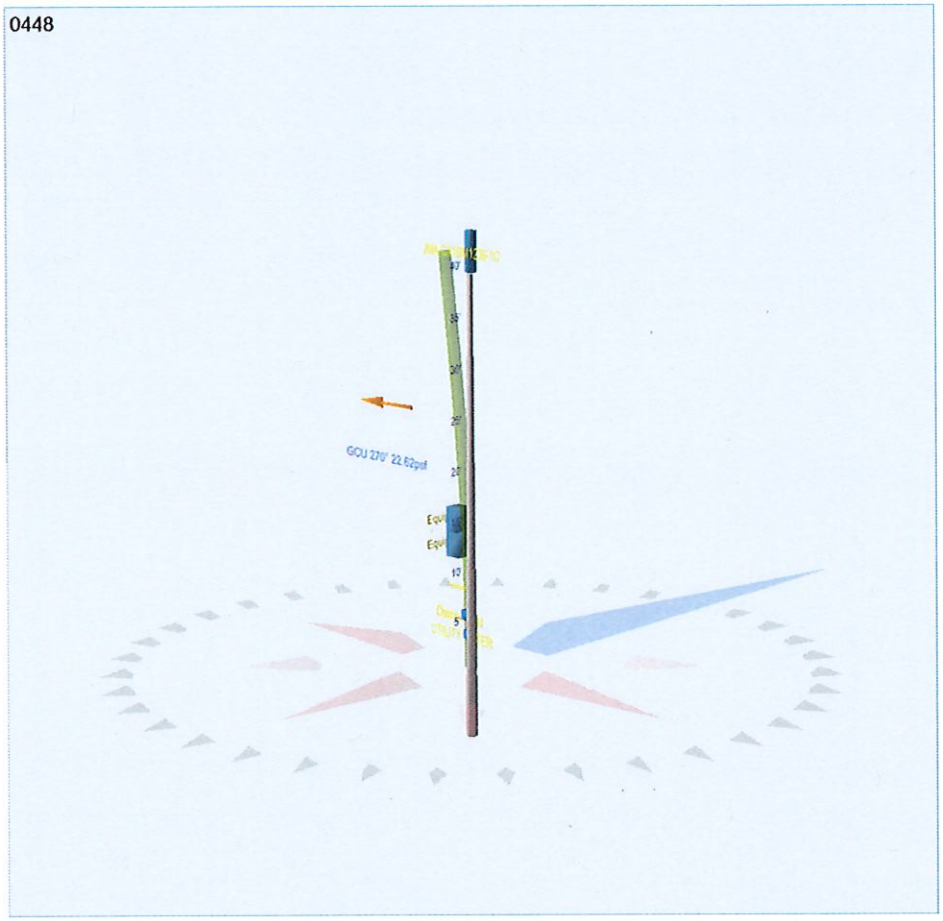

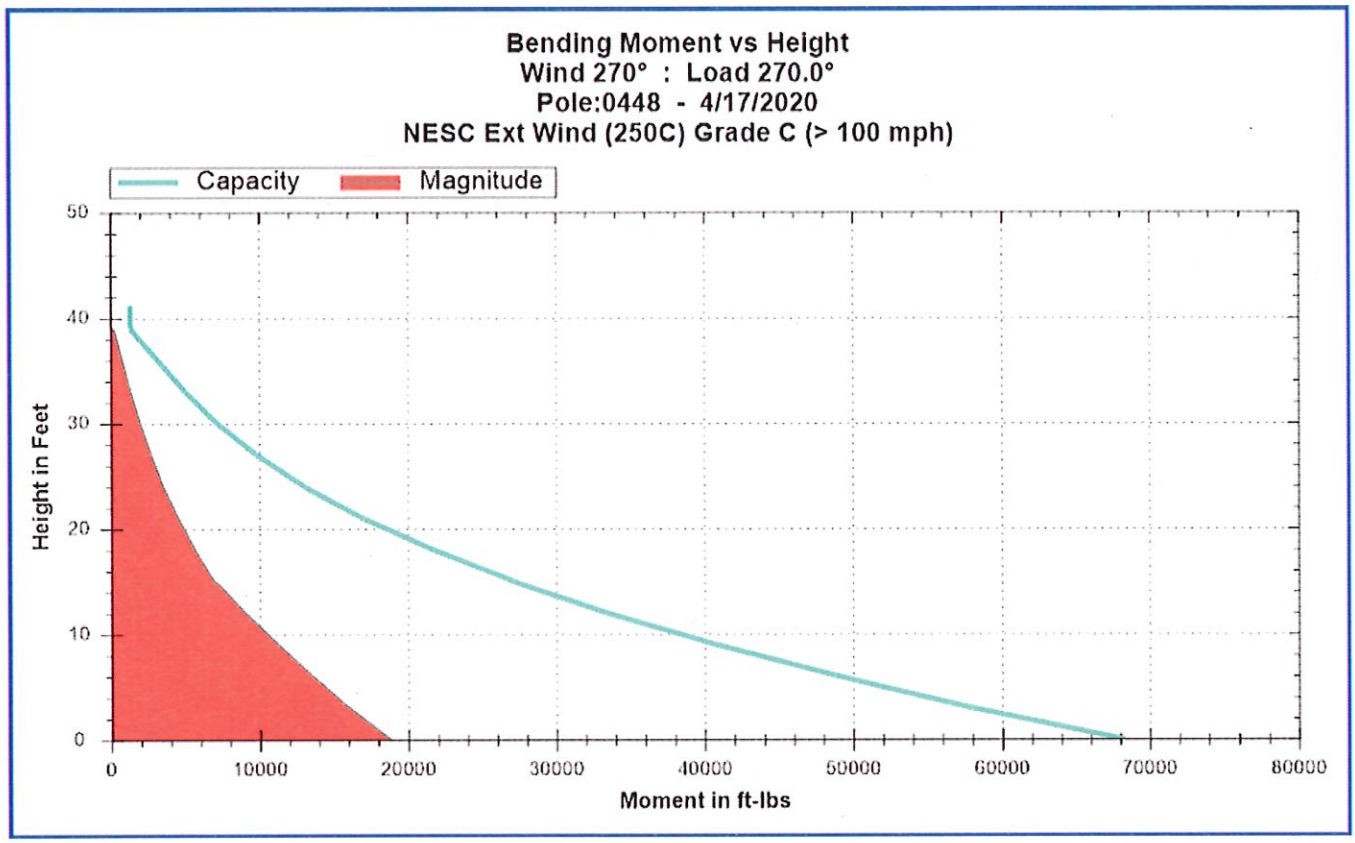
Bending Moment vs Height
Wind 270° : Load 270.0°
Pole:0448 - 4/17/2020
NESC Ext Wind (250C) Grade C (> 100 mph)
Capacity
Magnitude
Height in Feet
0
10
20
30
40
50
0
10000
20000
30000
40000
50000
60000
70000
80000
Moment in ft-lbs

Title Block Line 1
You can change this area using the "Settings" menu item and then using the "Printing & Title Block" selection.
Title Block Line 6

Project Title:
Engineer:
Project ID:
Project Descr:

Printed: 17 APR 2020, 4:29PM

Pole Footing Embedded in Soil

File = R:\Raleigh\C553YM~M\CUTTWM~Y\FWLQCK~Y\STQVF7~N\SEV10W~K\Analysis\overturn.ec6 .
Software copyright ENERCALC, INC. 1983-2020, Build:12.20.2.28 .

Lic. # : KW-06009909 Network Building & Consulting

DESCRIPTION: 0448 - Concrete Pole - Crown Castle Small Cells

Code References

Calculations per IBC 2012 1807.3, CBC 2013, ASCE 7-10
Load Combinations Used : ASCE 7-16

General Information

Pole Footing Shape	Circular
Pole Footing Diameter	14.60 in
Find Lateral Pressure for Given Depth	
No Lateral Restraint at Ground Surface	
Allow Passive	300.0 pcf
Max Passive	psf
Embedment Depth of Footing	7.0 ft

Controlling Values

Governing Load Combination : +D+0.60W	
Lateral Load	0.5376 k
Moment	11.301 k-ft
NO Ground Surface Restraint	
Pressures at 1/3 Depth	
Actual	**633.0** psf
Allowable	**700.0** psf
Footing Base Area	1.163 ft^2
Maximum Soil Pressure	3.499 ksf

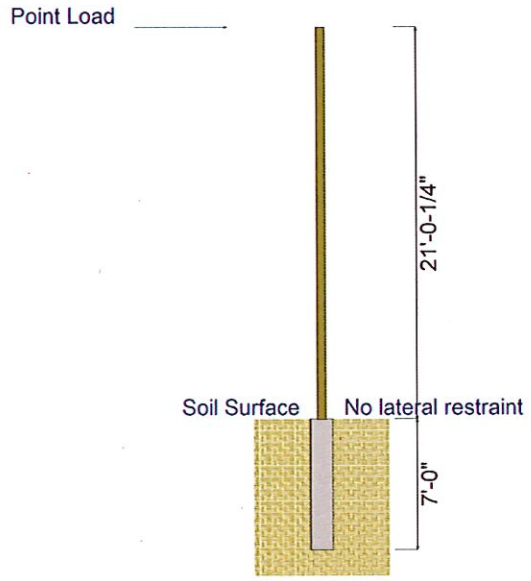

Applied Loads

Lateral Concentrated Load (k)		Lateral Distributed Loads (klf)		Vertical Load (k)
D : Dead Load	k		k/ft	4.068 k
Lr : Roof Live	k		k/ft	k
L : Live	k		k/ft	k
S : Snow	k		k/ft	k
W : Wind	0.8960 k		k/ft	k
E : Earthquake	k		k/ft	k
H : Lateral Earth	k		k/ft	k
Load distance above ground surface	21.022 ft	TOP of Load above ground surface	ft	
		BOTTOM of Load above ground surface	ft	

Load Combination Results

Load Combination	Forces @ Ground Surface Loads - (k)	Moments - (ft-k)	Pressure at 1/3 Depth Actual - (psf)	Allow - (psf)	Soil Increase Factor
D Only	0.000	0.000	1.0	700.0	1.000
+D+0.60W	0.538	11.301	633.0	700.0	1.000
+D+0.450W	0.403	8.476	475.0	700.0	1.000
+0.60D+0.60W	0.538	11.301	633.0	700.0	1.000
+0.60D	0.000	0.000	1.0	700.0	1.000

City of Fayetteville North Carolina

HISTORIC RESOURCES COMMISSION STAFF REPORT

COA NUMBER: 20-024

HISTORIC RESOURCES COMMISSION HEARING DATE: July 28, 2020

APPLICANT/OWNER: Crown Castle Fiber LLC fka Fiber Technologies Network, LLC
300 Meridian Centre Blvd, Suite 200
Rochester, NY, 14618

STAFF: Jennifer C Baptiste, CFM

PROPOSAL AND REQUESTED ACTION:
The applicant is requesting a Certificate of Appropriateness (COA) to erect a new 41-foot black concrete monopole with attached wireless telecommunication equipment.

SITE LOCATION:
The poles will be located in the right-of-way near 101 Person Street (no tax ids available).

HISTORIC DESIGNATION:

Downtown Historic District

BACKGROUND INFORMATION:

Downtown Historic District

The Downtown Historic District encompasses the original commercial center of the city. The historic, architectural, and archaeological resources of the district are significant for the information they possess relative to the settlement pattern and the urban development of Fayetteville. The period of significance covers the late 18th century to the mid-20th century.

Fayetteville's earliest settlement, the commercial district, developed as an important regional trade center in the Upper Cape Fear River Valley in eastern North Carolina. The architecture of the commercial buildings reflects this development and ranges from the brick Federal-style Liberty Row shops on Person Street to the early 20th century Dutch Colonial Revival, Mediterranean Revival and Neo-Classical Revival buildings. These buildings share common walls, of durable materials such as brick, ashlar veneer, and/or steel. Lots are typically 20 to 40 feet wide and 80 to 100 feet deep with buildings located adjacent to public sidewalks.

The Downtown Historic District, listed locally as well as on the National Register of Historic Places, includes two additional National Register Historic Districts; the Market House Square Historic District, and the Liberty Row Historic District. The Historic District's focal point is the brick Market House, constructed in 1832, a National Historic Landmark, modeled after an 18th century English town hall.

New Construction

New construction within a historic district can positively contribute to the evolution of the district provided the design is compatible with the district's significant characteristics. New architecture and development provides a continuum of the architectural evolution that began in Fayetteville over two centuries ago. An understanding of the impact new construction has on historic districts is essential prior to planning a new construction project.

In historically commercial districts, consideration for new construction include building material, size, scale, design, detail, setback, placement, style, and paving patterns.

SCOPE OF WORK SUMMARY:

Factors

The applicant proposes to place a new 39'3" black concrete pole with attached wireless telecommunications equipment between Person Street and Green Street.

Findings

This application is requesting a Certificate of Appropriateness for a site in the Downtown area, near 101 Person Street. This will be a new small cellular antenna and will not replace any of the existing streetlight poles at this location.

In addition to the installation of the new pole, an electric meter pedestal will be installed at the base of the fixture. The pole and all telecommunication components will be painted black to match the removed pole and the surrounding poles.

Small cell antennas must meet the application criteria of the Telecommunications Facilities section of the Unified Development Ordinance, Section 30-4.C.3.i. The application will be submitted through the Public Services Department for approval or denial.

Applicable Design Guidelines

New Construction

- Consult with the Fayetteville Historic Resources Commission and the City Planning Department in the early planning phases of a new construction project.
- New construction should not compromise the topography and site features, such as mature trees, nor should it block or obscure views and vistas.
- Materials used in new construction should be compatible with the scale, pattern, detail, finish, composition, and color of historic building materials in the historic district.

ATTACHMENTS:

- Application
- Site Photograph
- Proposed Pole Profiles

Planning & Zoning
433 Hay Street
Fayetteville, NC 28301
910-433-1612
www.fayettevillenc.gov

Project Overview

#403462

Project Title: SC-NC 0450 101 Person St
Application Type: 6.1) Certificate of Appropriateness
Workflow: Minor Work
Jurisdiction: City of Fayetteville
State: NC
County: Cumberland

Project Location

Project Address or PIN: SC-NC 0450 101 PERSON ST (Unverified)

GIS Verified Data

Property Owner:
Zoning District:
Fire District:
Hospital Overlay District:
Cape Fear District:
Haymount Historic District:
100 Year Flood:
Watershed:
Acreage:
Subdivision Name:
Airport Overlay District:
Coliseum Tourism District:
Downtown Historic District:
Floodway:
500 Year Flood:

Project Data

Was a pre-application conference conducted?: No
Project Type: Historic District
Date of Pre-Application Conference:
Exterior Work Type: New Construction

Describe in your own words all exterior work, buildings, and construction that can be seen from the public right-of-way. Be sure to indicate all exterior materials and colors. You may upload additional sheets and attach manufacturer's information where appropriate.: Crown Castle is proposing to install a new utility pole and attach wireless equipment to new pole per attached node package. PWC has requested that we do not add a street light fixture to new pole thus the need for a new COA approval.

Primary Contact Information

Project Contact - Agent/Representative
Renee Guider
Crown Castle
4545 East River Road, 320
West Henrietta, NY 14586
P:5854455896

Project Owner
George Sipek
Crown Castle Fiber, LLC
100 Regency Foret Dr, 300
Cary, NC 27518
P:919-234-9979

Renee.Guider@crowncastle.com

George.Sipek@crowncastle.com

Indicate which of the following project contacts should be included on this project:

NC State License Number:

As an unlicensed contractor, I am aware that I cannot enter into a contract that the total amount of the project exceeds $30,000. :

Planning & Zoning
433 Hay Street
Fayetteville, NC 28301
910-433-1612
www.fayettevillenc.gov

Project Overview

#403462

Project Title: SC-NC 0450 101 Person St
Application Type: 6.1) Certificate of Appropriateness
Workflow: Minor Work
Jurisdiction: City of Fayetteville
State: NC
County: Cumberland

Project Location

Project Address or PIN: SC-NC 0450 101 PERSON ST (Unverified)

GIS Verified Data

Property Owner:
Zoning District:
Fire District:
Hospital Overlay District:
Cape Fear District:
Haymount Historic District:
100 Year Flood:
Watershed:
Acreage:
Subdivision Name:
Airport Overlay District:
Coliseum Tourism District:
Downtown Historic District:
Floodway:
500 Year Flood:

Project Data

Was a pre-application conference conducted?: No
Project Type: Historic District
Date of Pre-Application Conference:
Exterior Work Type: New Construction

Describe in your own words all exterior work, buildings, and construction that can be seen from the public right-of-way. Be sure to indicate all exterior materials and colors. You may upload additional sheets and attach manufacturer's information where appropriate.: Crown Castle is proposing to install a new utility pole and attach wireless equipment to new pole per attached node package. PWC has requested that we do not add a street light fixture to new pole thus the need for a new COA approval.

Primary Contact Information

Project Contact - Agent/Representative
Renee Guider
Crown Castle
4545 East River Road, 320
West Henrietta, NY 14586
P:5854455896

Project Owner
George Sipek
Crown Castle Fiber, LLC
100 Regency Foret Dr, 300
Cary, NC 27518
P:919-234-9979

Renee.Guider@crowncastle.com

George.Sipek@crowncastle.com

Indicate which of the following project contacts should be included on this project:

NC State License Number:

As an unlicensed contractor, I am aware that I cannot enter into a contract that the total amount of the project exceeds $30,000. :

City of Fayetteville North Carolina

Subject Property

DocuSign Envelope ID: 6645CF59-75CE-45EE-92E6-D327D90CBF91

CROWN CASTLE

SMALL CELL
PROPOSED NODE SC-NC 0450 LOCATION
101 PERSON STREET
FAYETTEVILLE, NC 28301

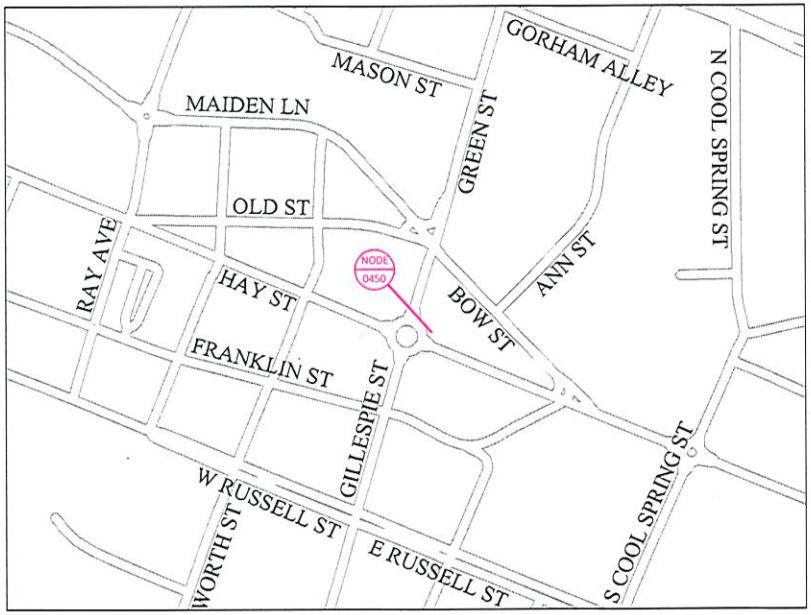

LOCATION MAP
LAT: 35.052598° LONG: -78.877948°
1" = 500'

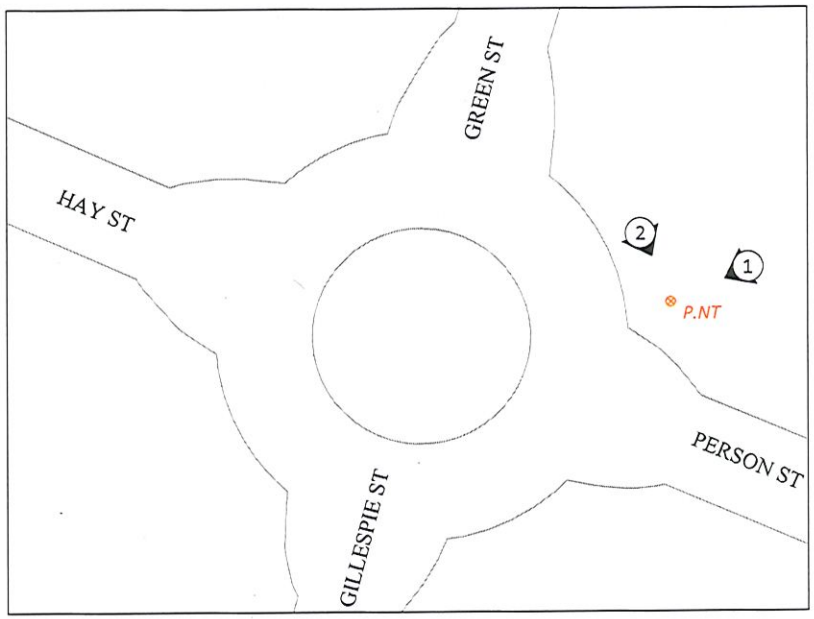

NODE PLACEMENT
1" = 50'

FOR REVIEW ONLY NOT FOR CONSTRUCTION

NORTH CAROLINA PROFESSIONAL SEAL 036434 ENGINEER PAUL G. JONES
6/9/2020

THIS MAP MAY NOT BE A CERTIFIED SURVEY AND HAS NOT BEEN REVIEWED BY A LOCAL GOVERNMENT AGENCY FOR COMPLIANCE WITH ANY APPLICABLE LAND DEVELOPMENT REGULATIONS AND HAS NOT BEEN REVIEWED FOR COMPLIANCE WITH RECORDING REQUIREMENTS FOR PLATS.

LOCATION: FAYETTEVILLE, NORTH CAROLINA
35.052598°, -78.877948°

POLE OWNER: CROWN CASTLE

NOTES:

PREPARED FOR: CROWN CASTLE, 1508 CORPORATE DRIVE, CANONSBURG, PA 15317

PREPARED BY: PIKE TELECOM, 21 Oxford Rd, Mansfield, MA 02048, www.pikeTelecom.com, 1-508-337-7600

CROWN CASTLE SMALL CELL LOCATION MAPS

REVISIONS

REV	DESCRIPTION	DATE
1	REVISED TO REMOVE METER PEDESTAL	04/02/20
2	REVISED TO REMOVE STREETLIGHT	06/05/20

DRAFTER: NB
SCALE: AS NOTED
ISSUE DATE: 07/09/19
INDEX NAME: SC-NC 0450
SHEET #: 1 OF 11

1

DocuSign Envelope ID: 6645CF59-75CE-45EE-92E6-D327D90CBF91

* ROW INFORMATION TAKEN FROM COUNTY OF CUMBERLAND GIS DATA DATED 2016

SC-NC-0450 FOR REVIEW ONLY NOT FOR CONSTRUCTION

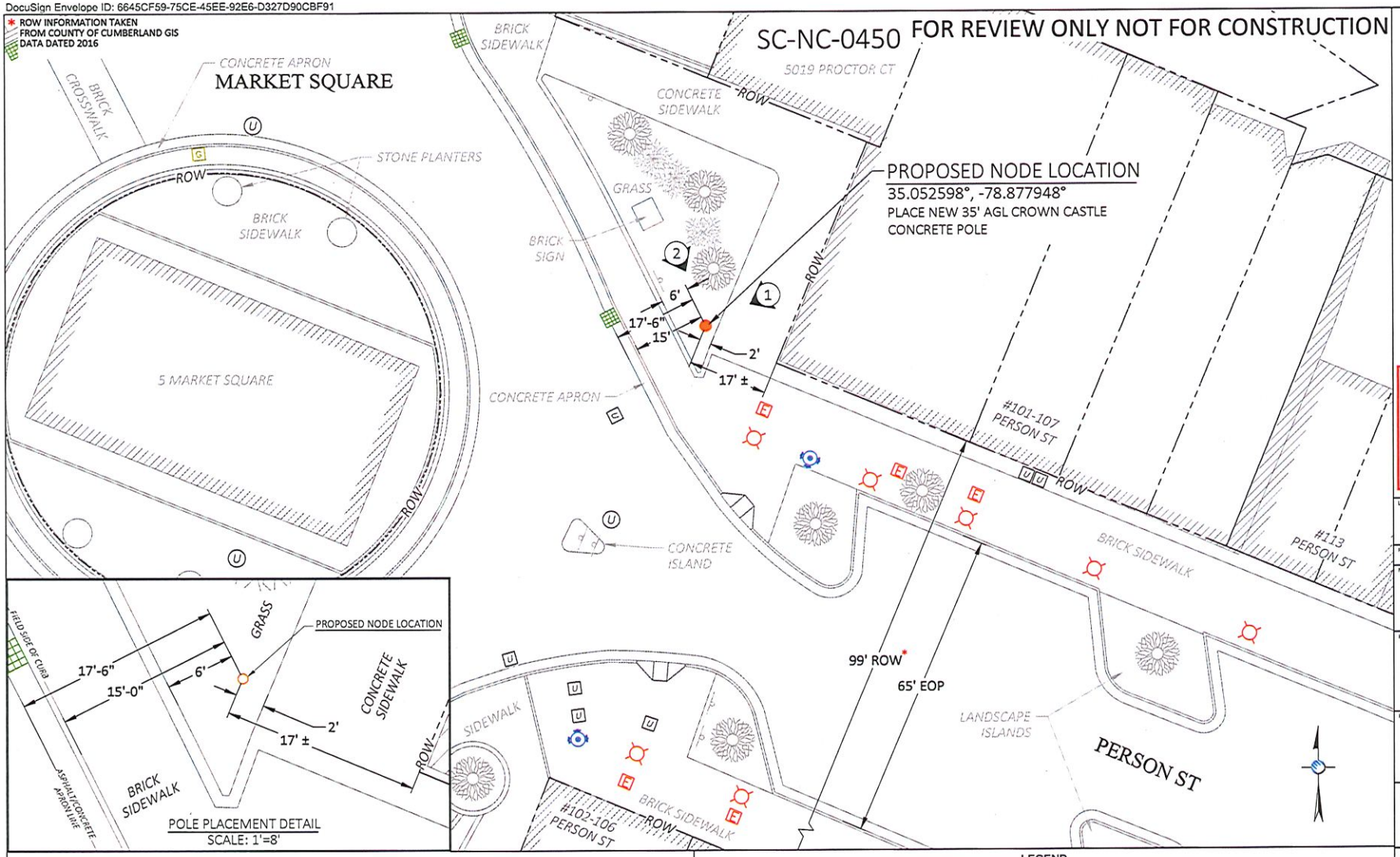

1"= 20 FEET

0 10 20 40 60

LEGEND

	PROPOSED POLE		CATV HH		SEWER MH		PARKING METER(S)		OVERHEAD LINES
	ELECTRIC POLE		COMM PEDESTAL		DRAIN MH		STEEL POST		TEL
	JOINT UTILITY POLE		IRRIGATION VALVE		TELEPHONE MH		SIGN POLE		ELECTRIC
	LAMP POST		WATER METER		ELECTRIC MH		CATCH BASIN		SEWER
	TRAFFIC LIGHT		SEWER GATE		CATV MH		ELECTRIC VAULT		STORM DRAIN
	STREET LIGHT		GAS GATE		WATER MH		TRAFFIC HH		WATER
	ELECTRIC HH		WATER GATE		MAIL BOX		FENCE		GAS
	TEL HH		HYDRANT		BUSH/SHRUB		RIGHT OF WAY		TRAFFIC

NORTH CAROLINA PROFESSIONAL SEAL 036434 ENGINEER PAUL G. JONES
6/9/2020

North Carolina 811 www.nc811.org

CALL BEFORE YOU DIG REQUIRES 72 HOURS BEFORE YOU EXCAVATE 811 OR 1-800-632-4949

THIS MAP MAY NOT BE A CERTIFIED SURVEY AND HAS NOT BEEN REVIEWED BY A LOCAL GOVERNMENT AGENCY FOR COMPLIANCE WITH ANY APPLICABLE LAND DEVELOPMENT REGULATIONS AND HAS NOT BEEN REVIEWED FOR COMPLIANCE WITH RECORDING REQUIREMENTS FOR PLATS.

LOCATION: FAYETTEVILLE, NORTH CAROLINA
35.052598°, -78.877948°

POLE OWNER: CROWN CASTLE

NOTES:

PREPARED FOR: CROWN CASTLE, 1500 CORPORATE DRIVE, CANONSBURG, PA 15317

PREPARED BY: PIKE TELECOM, 21 Oxford Rd, Mansfield, MA 02048, www.piketelecom.com, 1-508-337-7600

CROWN CASTLE SMALL CELL SITE PLAN

REVISIONS

REV	DESCRIPTION	DATE
1	REVISED TO REMOVE METER PEDESTAL	04/03/20
2	REVISED TO REMOVE STREETLIGHT	06/05/20

DRAFTER: NB
SCALE: SEE BAR SCALE
ISSUE DATE: 07/09/19
INDEX NAME: SC-NC GN 0450
SHEET #: 2 OF 11

2

DocuSign Envelope ID: 6645CF59-75CE-45EE-92E6-D327D90CBF91

FOR REVIEW ONLY NOT FOR CONSTRUCTION

NOTE 1:
40" MIN. WORKER SAFETY ZONE BETWEEN LOWEST ENERGIZED POWER & HIGHEST COMMUNICATIONS CABLE IN ACCORDANCE WITH NESC REGULATIONS

THERE SHALL NOT BE ANY EXISTING, PROPOSED, OR FUTURE AERIAL SPANNING ATTACHMENTS ADDED TO THIS POLE.

ABSOLUTELY NO FIELD CORING/DRILLING OR CUTTING OF METALLIC OR CONCRETE POLE TO BE ALLOWED. ALL PROPOSED EQUIPMENT MUST BE BANDED TO POLE.

NOTE:
PLACE NEW 35'-0" AGL (41' OAL) BLACK CROWN CASTLE CONCRETE POLE

ALL CROWN CASTLE EQUIPMENT TO BE PAINTED BLACK TO MATCH POLE.

ABSOLUTE MINIMUM DEPTH OF SET MUST MEET OR EXCEED 10% OF OVERALL HEIGHT ABOVE GROUND (INCLUDING ATTACHMENTS), PLUS 2 FEET.

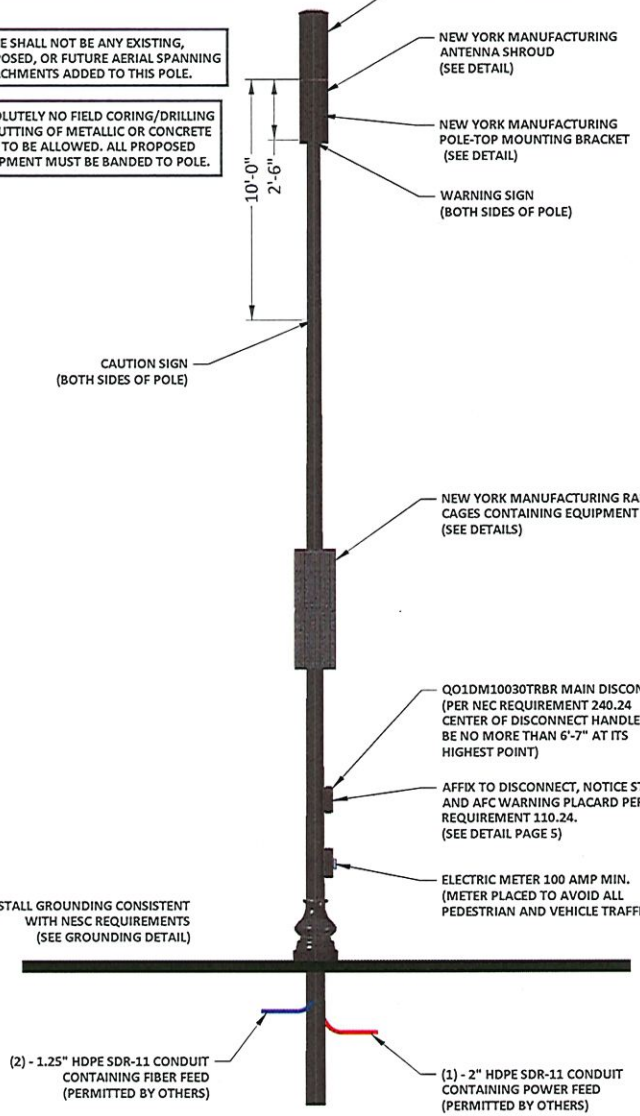

1 PROPOSED PROFILE - REAR VIEW
LOOKING SOUTHWEST TOWARDS MARKET SQUARE

SET POLE TO A DEPTH OF 6'-0" BELOW GRADE WITHIN NORMAL SOIL/DIRT CONDITIONS. POLE TO BE BACK-FILLED AND TAMPED AROUND POLE FOR PROPER INSTALLATION

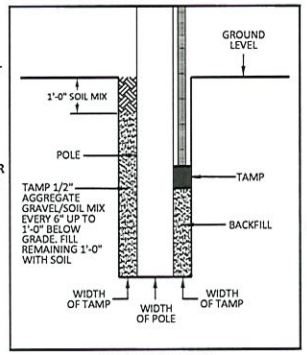

POLE SET DETAIL
N.T.S

SCALE IN FEET
5 0 5

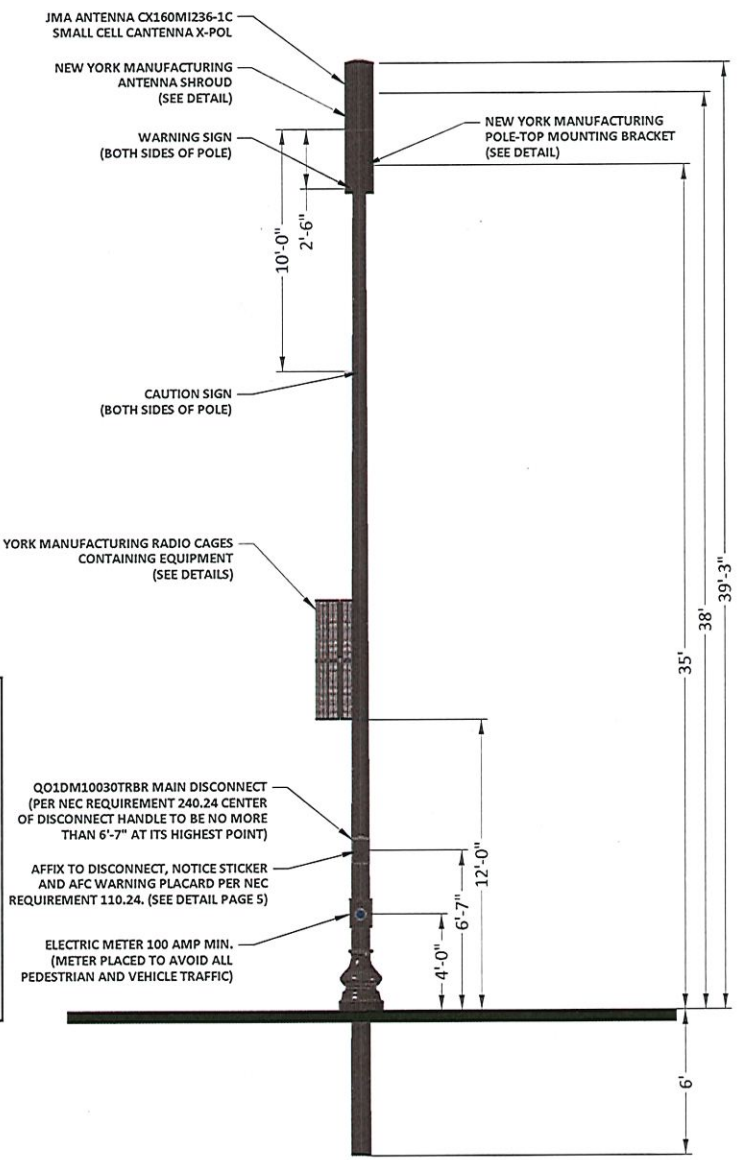

2 PROPOSED PROFILE - SIDE VIEW
LOOKING SOUTHEAST ALONG MARKET SQUARE

PROPOSED TOP VIEW

NORTH CAROLINA PROFESSIONAL SEAL 036434 ENGINEER PAUL G. JONES
6/9/2020

THIS MAP MAY NOT BE A CERTIFIED SURVEY AND HAS NOT BEEN REVIEWED BY A LOCAL GOVERNMENT AGENCY FOR COMPLIANCE WITH ANY APPLICABLE LAND DEVELOPMENT REGULATIONS AND HAS NOT BEEN REVIEWED FOR COMPLIANCE WITH RECORDING REQUIREMENTS FOR PLATS.

LOCATION: FAYETTEVILLE, NORTH CAROLINA
35.052598°,-78.877948°

POLE OWNER: CROWN CASTLE

NOTES:

PREPARED FOR: CROWN CASTLE, 1506 CORPORATE DRIVE, CANONSBURG, PA 15317

PREPARED BY: PIKE TELECOM, 21 Oxford Rd, Mansfield, MA 02048, www.piketelecom.com, 1-508-337-7600

CROWN CASTLE SMALL CELL PROPOSED

REVISIONS

REV	DESCRIPTION	DATE
1	REVISED TO REMOVE METER PEDESTAL	04/03/20

DRAFTER: NB
SCALE: 1" = 5'
ISSUE DATE: 07/09/19
NODE NAME: SC-NC 450
SHEET #: 3 OF 11

3

DocuSign Envelope ID: 6645CF59-75CE-45EE-92E6-D327D90CBF91

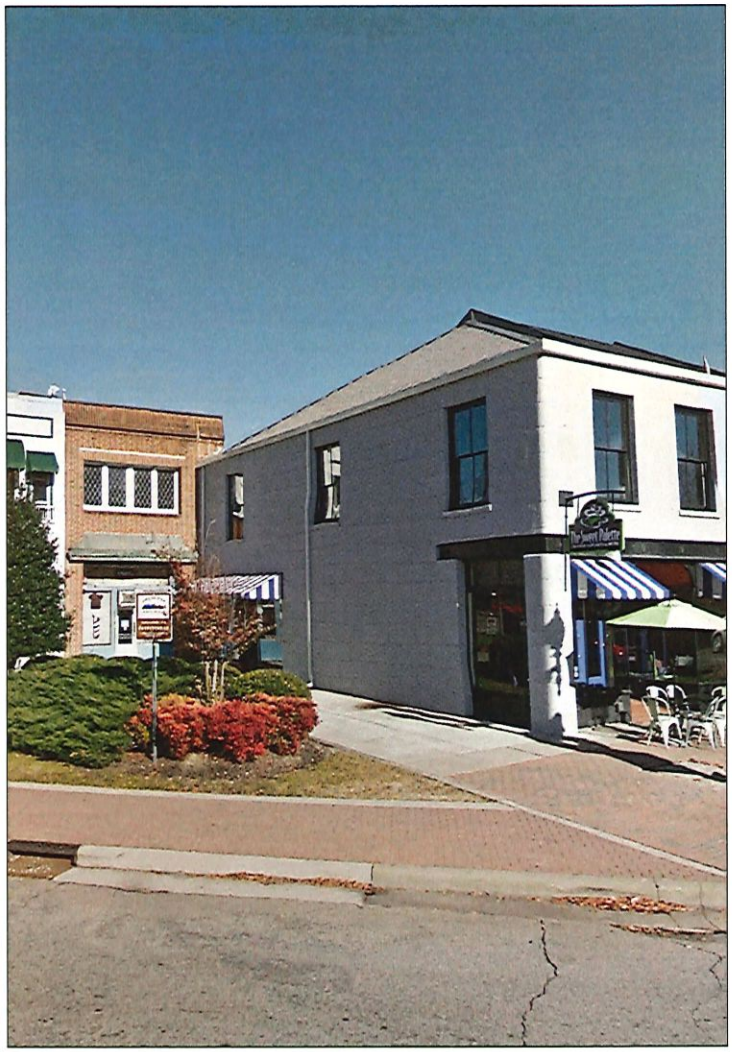

EXISTING PHOTOGRAPHIC VIEW

PROPOSED PHOTOGRAPHIC SIMULATION

FOR REVIEW ONLY NOT FOR CONSTRUCTION

Paul G. Jones

NORTH CAROLINA PROFESSIONAL SEAL 036434 ENGINEER PAUL G. JONES

6/9/2020

THIS MAP MAY NOT BE A CERTIFIED SURVEY AND HAS NOT BEEN REVIEWED BY A LOCAL GOVERNMENT AGENCY FOR COMPLIANCE WITH ANY APPLICABLE LAND DEVELOPMENT REGULATIONS AND HAS NOT BEEN REVIEWED FOR COMPLIANCE WITH RECORDING REQUIREMENTS FOR PLATS.

LOCATION:
FAYETTEVILLE, NORTH CAROLINA
35.052598°,-78.877948°

POLE OWNER: CROWN CASTLE

NOTES:

PREPARED FOR:
CROWN CASTLE
1980 CORPORATE DRIVE
CANONSBURG, PA 15317

PREPARED BY:
PIKE TELECOM
21 Oxford Rd
Mansfield, MA 02048
www.piketelecom.com
1-508-337-7600

CROWN CASTLE SMALL CELL
PHOTOSIM

REVISIONS

REV	DESCRIPTION	DATE
1	REVISED TO REMOVE METER PEDESTAL	04/03/20
2	REVISED TO REMOVE STREETLIGHT	06/05/20

DRAFTER: NB
SCALE: NTS
ISSUE DATE: 07/09/19
NODE NAME: SC-NC 450
SHEET #: 4 OF 11

4

DocuSign Envelope ID: 6645CF59-75CE-45EE-92E6-D327D90CBF91

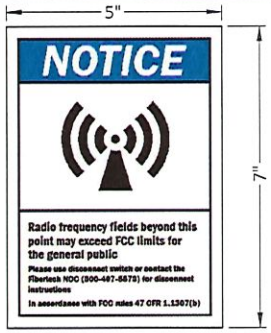

AFC STICKER WITH PLACARD NOTING MAX AVAILABLE FAULT CURRENT AND DATE

POLE SIGNAGE

NOT TO SCALE

Host (B1)				Remote (D1)		
Color	TX	RX	Technologies	Color	TX	RX
		SFP Label				SFP Label
Purple	1471	1491	1900 PCS LTE	Gray	1491	1471
Green	1511	1531	850 CDMA	Blue	1531	1511
Orange	1551	1571	700 LTE	Yellow	1571	1551
Brown	1591	1611	2100 AWS LTE	Red	1611	1591

COLOR CODING REFERENCE

POWER AND/OR POWER WIRE BROUGHT TO THIS WIRELESS EQUIPMENT POLE SHALL BE SUPPLIED BY LOCAL POWER COMPANY

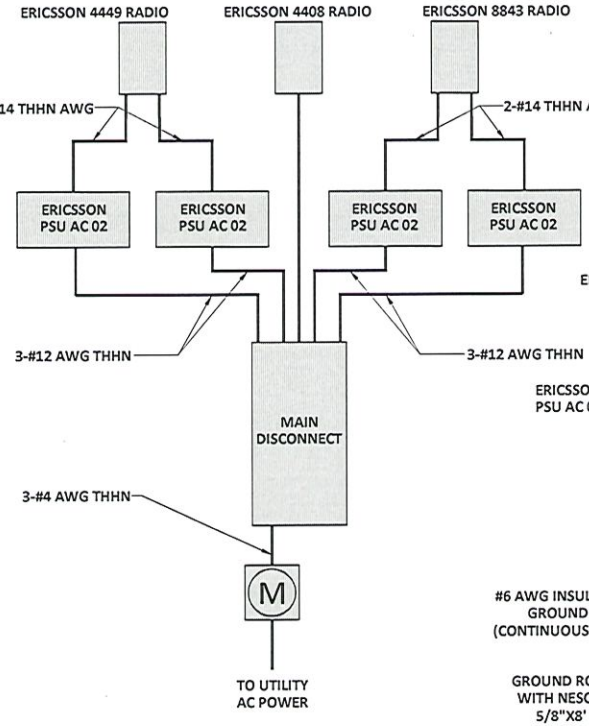

ELECTRICAL DIAGRAM

NOT TO SCALE

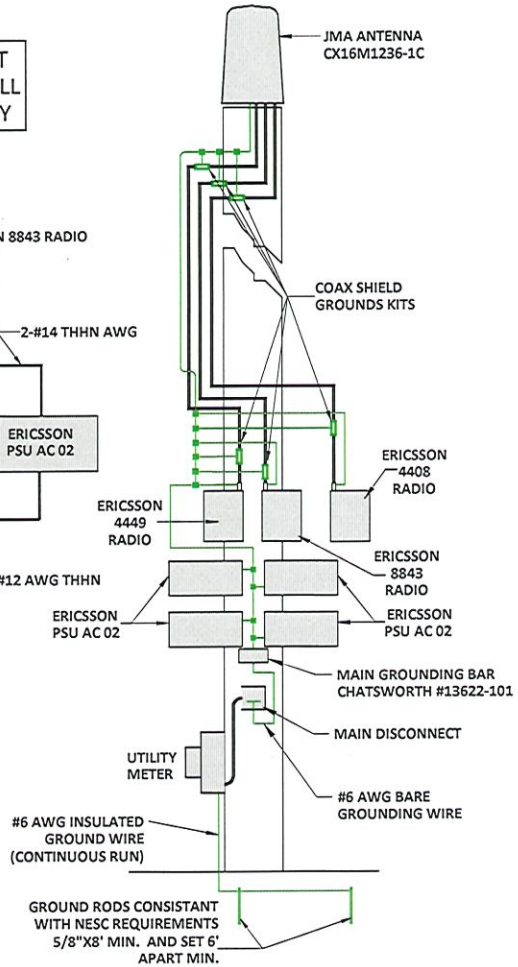

TYPICAL GROUNDING DIAGRAM

NOT TO SCALE

FOR REVIEW ONLY NOT FOR CONSTRUCTION

NORTH CAROLINA PROFESSIONAL SEAL 036434 ENGINEER PAUL G. JONES
6/9/2020

THIS MAP MAY NOT BE A CERTIFIED SURVEY AND HAS NOT BEEN REVIEWED BY A LOCAL GOVERNMENT AGENCY FOR COMPLIANCE WITH ANY APPLICABLE LAND DEVELOPMENT REGULATIONS AND HAS NOT BEEN REVIEWED FOR COMPLIANCE WITH RECORDING REQUIREMENTS FOR PLATS.

LOCATION: FAYETTEVILLE, NORTH CAROLINA
35.052598°,-78.877948°

POLE OWNER: CROWN CASTLE

NOTES:

PREPARED FOR: CROWN CASTLE, 1500 CORPORATE DRIVE, CANONSBURG, PA 15317

PREPARED BY: PIKE TELECOM, 21 Oxford Rd, Mansfield, MA 02048, www.piketelecom.com, 1-508-337-2000

CROWN CASTLE SMALL CELL
POLE SIGNAGE
& WIRING DIAGRAMS

REVISIONS

REV	DESCRIPTION	DATE
1	REVISED TO REMOVE METER PEDESTAL	04/03/20
2	REVISED TO REMOVE STREETLIGHT	06/05/20

DRAFTER: NB
SCALE: NTS
ISSUE DATE: 07/09/19
NODE NAME: SC-NC 450
SHEET #: 5 OF 11

5

DocuSign Envelope ID: 6645CF59-75CE-45EE-92E6-D327D90CBF91

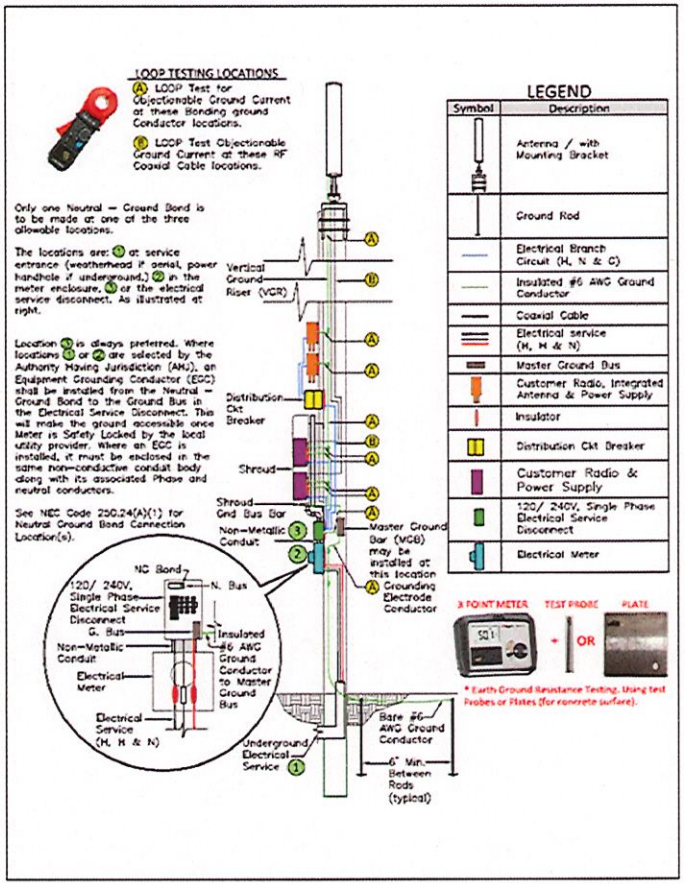

TESTING DIAGRAM

TESTING & DOCUMENTATION

Earth Ground Resistance Test -

1st test-
- Use 3-Point, 62% fall potential ground Meter
- Must read less than 25 ohms before being connected to the power system neutral. Take pictures of the reading

2nd test-
- -Same test as above after being connected to the power system neutral should read less than 5 ohms. Take pictures of the reading

Bonding and Objectionable Current Test -

3rd test-
- Use clamp-on earth ground meter
- Performed while site is energized and test every "loop"
- Each "loop" must read less than 1 ohm
- Take picture of each loop reading

Contact Voltage Test -

4th test-
- Use a Foreign Voltage Detector
- Test at all conductive services (meter box, disconnect, concrete, etc.) at the Node Pole.
- Should have 0 voltage reading at all points. Take pictures of all tests.

TEST EQUIPMENT

FOR REVIEW ONLY NOT FOR CONSTRUCTION

NORTH CAROLINA PROFESSIONAL SEAL 036434 ENGINEER PAUL G. JONES
6/9/2020

THIS MAP MAY NOT BE A CERTIFIED SURVEY AND HAS NOT BEEN REVIEWED BY A LOCAL GOVERNMENT AGENCY FOR COMPLIANCE WITH ANY APPLICABLE LAND DEVELOPMENT REGULATIONS AND HAS NOT BEEN REVIEWED FOR COMPLIANCE WITH RECORDING REQUIREMENTS FOR PLATS.

LOCATION: FAYETTEVILLE, NORTH CAROLINA
35.052598°,-78.877948°

POLE OWNER: CROWN CASTLE

NOTES:

PREPARED FOR: CROWN CASTLE, 1500 CORPORATE DRIVE, CANONSBURG, PA 15317

PREPARED BY: PIKE TELECOM, 21 Oxford Rd, Mansfield, MA 02048, www.piketelecom.com, 1-508-337-7600

CROWN CASTLE SMALL CELL TESTING & DOCUMENTATION

REVISIONS		
REV	DESCRIPTION	DATE
1	REVISED TO REMOVE METER PEDESTAL	04/03/20
2	REVISED TO REMOVE STREETLIGHT	06/05/20

DRAFTER: NB
SCALE: NTS
ISSUE DATE: 07/09/19
NODE NAME: SC-NC 450
SHEET #: 6 OF 11

6

DocuSign Envelope ID: 6645CF59-75CE-45EE-92E6-D327D90CBF91

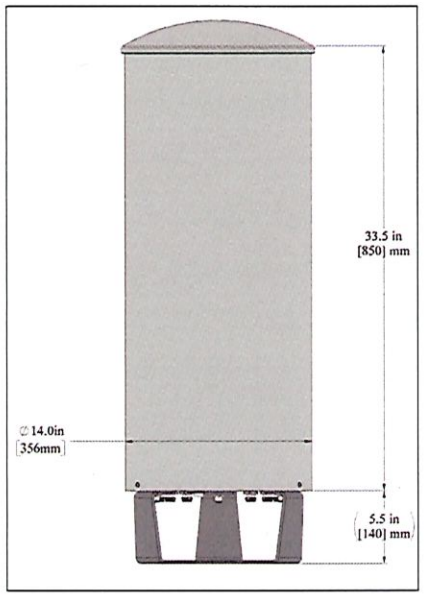

ANTENNA CX160MI236-1C SMALL CELL CANTENNA X-POL
698-960/1695-2700/3550-3700/5150-5925MHz
SIDE VIEW

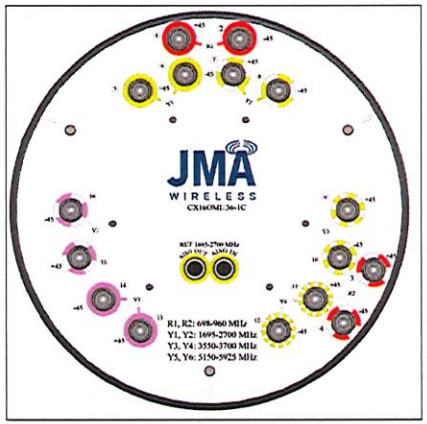

ANTENNA CX160MI236-1C SMALL CELL CANTENNA X-POL
698-960/1695-2700/3550-3700/5150-5925MHz
BOTTOM VIEW
(FOR ANTENNA COLOR SEE PROPOSED PAGE)

Product Specifications

CX16OMI236-1C and -2C

NWAV™ X-Pol OMNI Cantenna | 16-Port | 2.98 cu. ft | 360°

JMA WIRELESS

Mechanical specifications	
Dimensions height/diameter, inches (mm)	33.5/14 (851/356)
Volume (cubic feet)	2.98
No. of RF input ports, connector type and location	16 x 4.3-10 female, bottom
RF connector torque	96 lbf·in (10.85 N·m or 8 lbf·ft)
Net antenna weight, lb (kg)	35 (15.9)
Rated wind survival speed, mph (km/h)	150 (241)
Frontal wind loading @ 160 km/h, lbf (N)	TBD
Equivalent flat plate @100 mph and Cd=2, sq ft	TBD

16-Port 2 ft 360° Cantenna with MET/RET-controlled from 1695-2700 MHz

(4) 698-960 MHz & (4) 1695-2700 MHz & (4) 3550-3700 MHz & (4) 5150-5925 MHz

- X-Pol, small cell, Hex-Port antenna
- Suitable for pole or building mount
- 4x4 MIMO low-band, 4x4 MIMO for each of AWS/PCS/LAA/CBRS
- Internal beam combining
- Dependent MET/RET control for 1695-2700 MHz frequencies
- Suitable for LTE/UMTS/CDMA/GSM technologies
- Cost-effective solution for neutral host locations

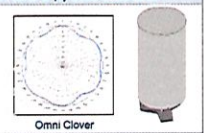

Omni Clover

Electrical specification (minimum/maximum)	Ports 1,2,3,4		Ports 5,6,7,8				
Frequency bands, MHz	696-768	824-[illegible]	1695-1880	1690-1990	1920-2180	2300-2500	2500-2700
Polarization	± 45°		± 45°				
Average gain over all tilts, dBi	3.[illegible]	3.6	9.4	9.7	9.9	10.1	10.2
Horizontal beamwidth (HSW), degrees	360°		360°				
Vertical beamwidth, (VBW), degrees[1]	[illegible]°	70°	15.7°	15.1°	14.6°	14.6°	12.2°
Electrical downtilt (EDT) range, degrees	0° (FET)		2-8° (MET/RET)				
Minimum cross polar isolation, port-to-port, dB	[illegible]	25	25	25	25	25	25
Maximum VSWR/return loss, dB	1.5:1/ -14.0		1.5:1/ -14.0				
Maximum passive intermodulation (PIM), 2x 20W carrier, dBm	-153		-153				
Maximum input power per any port, watts	250		125				

Electrical specification (minimum/maximum)	Ports 9,10,11,12	Ports 13,14, 15,16				
Frequency bands, MHz	3550- 3700	5150-5350	5350-5470	5470-5725	5725-5850	5850-5925
Polarization	± 45°	± 45°				
Average gain over all tilts, dBi	5.9	5.5	5.7	5.5	5.5	5.6
Horizontal beamwidth (HSW), deg	360°					
Vertical beamwidth, (VBW), deg[1]	30°	24°	24°	20°	14°	18°
Elec downtilt (EDT) range, deg	0° (FET)					
Min X polar isolation, P2P, dB	25	25				
Max VSWR/return loss, dB	1.5:1/ -14.0	1.5:1/ -14.0				
PIM	N/A					
Maximum input power port	10	25	-	25	1.0	-

©2017 JMA Wireless. All rights reserved. All trademarks identified by ® or ™ are registered trademarks, respectively, of JMA Wireless. All specifications are subject to change without notice. See www.jmawireless.com for the most current information. Revised: October 19, 2017

Remote Electrical Tilt (RET 1000) information	
RET location	Integrated into antenna
RET interface connector type	8-pin AISG connector per IEC 60130-9
RET interface connector quantity	2 pairs of AISG male/female connectors
RET interface connector location	Bottom of the antenna
Total No. of internal RETs high bands	1
RET input operating voltage, vdc	10-30
RET max power consumption, idle state, W	≤ 2.0
RET max power consumption, normal operating conditions, W	≤ 13.0
RET communication protocol	AISG [illegible]

RET topology

A single RET device controls all 3 sectors via the designated external AISG connector as shown below

RET device	Band	RF port
1	1695–2700	[illegible]

Array topology

Array ID	Band	RF Port
R1	698-960	1-2
R2	698-960	3-4
Y1	1695-2700	5-6
Y2	1695-2700	7-8
Y3	3550-3700	9-10
Y4	3550-3700	11-12
V1	5150-5925	13-14
V2	5150-5925	15-16

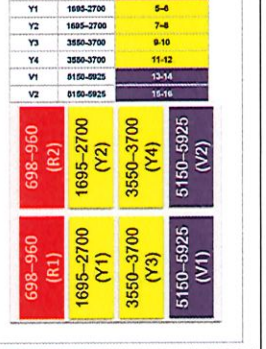

©2017 JMA Wireless. All rights reserved. All trademarks identified by ® or ™ are registered trademarks, respectively, of JMA Wireless. All specifications are subject to change without notice. See www.jmawireless.com for the most current information. Revised: October 19, 2017

ANTENNA CX160MI236-1C SMALL CELL CANTENNA X-POL
698-960/1695-2700/3550-3700/5150-5925MHz
PRODUCT SPECIFICATIONS

FOR REVIEW ONLY NOT FOR CONSTRUCTION

Paul G. Jones

NORTH CAROLINA PROFESSIONAL SEAL 036434 ENGINEER PAUL G. JONES
6/9/2020

THIS MAP MAY NOT BE A CERTIFIED SURVEY AND HAS NOT BEEN REVIEWED BY A LOCAL GOVERNMENT AGENCY FOR COMPLIANCE WITH ANY APPLICABLE LAND DEVELOPMENT REGULATIONS AND HAS NOT BEEN REVIEWED FOR COMPLIANCE WITH RECORDING REQUIREMENTS FOR PLATS.

LOCATION:
FAYETTEVILLE, NORTH CAROLINA
35.052598°,-78.877948°

POLE OWNER:
CROWN CASTLE

NOTES:

PREPARED FOR:
CROWN CASTLE
1500 CORPORATE DRIVE
CANONSBURG, PA 15317

PREPARED BY:
PIKE TELECOM
21 Orchard Rd
Mansfield, MA 02048
www.piketelecom.com
1-508-337-2600

CROWN CASTLE SMALL CELL
JMA CX160MI236-1C
ANTENNA DETAIL

REVISIONS

REV	DESCRIPTION	DATE
1	REVISED TO REMOVE METER PEDESTAL	04/03/20
2	REVISED TO REMOVE STREETLIGHT	06/05/20

DRAFTER: NB
SCALE: NTS
ISSUE DATE: 07/09/19
NODE NAME: SC-NC 450
SHEET #: 7 OF 11

7

DocuSign Envelope ID: 6645CF59-75CE-45EE-92E6-D327D90CBF91

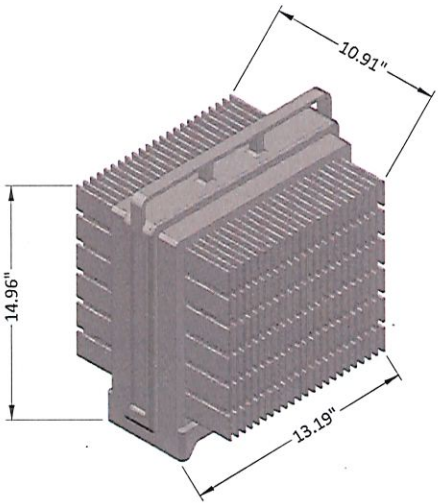

ERICSSON 8843 REMOTE RADIO
ISOMETRIC VIEW

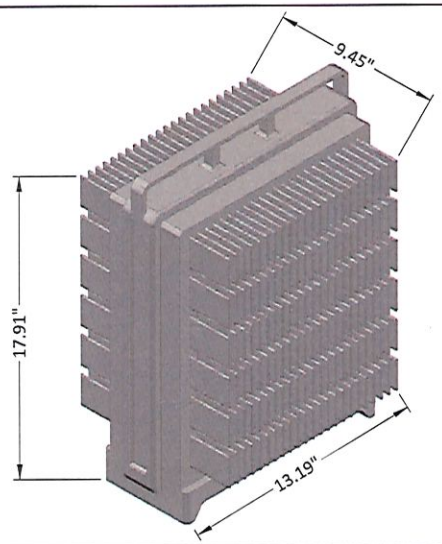

ERICSSON 4449 REMOTE RADIO
ISOMETRIC VIEW

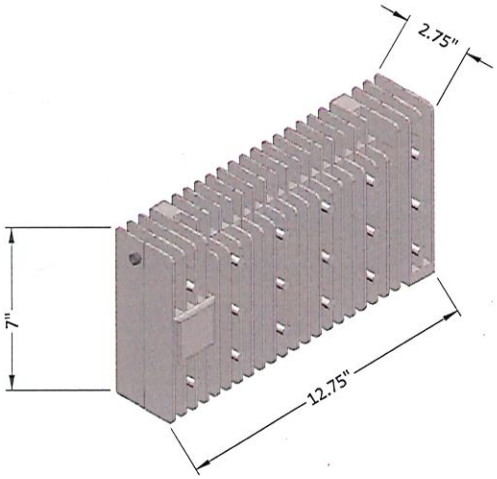

ERICSSON RECTIFIER PSU AC 02
ISOMETRIC VIEW

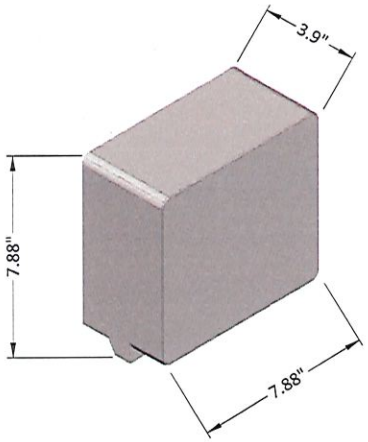

ERICSSON 4408 RRH
ISOMETRIC VIEW

FOR REVIEW ONLY NOT FOR CONSTRUCTION

NORTH CAROLINA PROFESSIONAL SEAL 036434 ENGINEER PAUL G. JONES
6/9/2020

THIS MAP MAY NOT BE A CERTIFIED SURVEY AND HAS NOT BEEN REVIEWED BY A LOCAL GOVERNMENT AGENCY FOR COMPLIANCE WITH ANY APPLICABLE LAND DEVELOPMENT REGULATIONS AND HAS NOT BEEN REVIEWED FOR COMPLIANCE WITH RECORDING REQUIREMENTS FOR PLATS.

LOCATION: FAYETTEVILLE, NORTH CAROLINA
35.052598°,-78.877948°

POLE OWNER: CROWN CASTLE

NOTES:

PREPARED FOR: CROWN CASTLE
1500 CORPORATE DRIVE
CANONSBURG, PA 15317

PREPARED BY: PIKE TELECOM
21 Oxford Rd
Mansfield, MA 02048
www.piketelecom.org
1-508-337-7600

CROWN CASTLE SMALL CELL
REMOTE RADIOS 8843, 4449
RECITIFIER & 4408 RRH

REVISIONS

REV	DESCRIPTION	DATE
1	REVISED TO REMOVE METER PEDESTAL	04/03/20
2	REVISED TO REMOVE STREETLIGHT	06/05/20

DRAFTER: NB
SCALE: NTS
ISSUE DATE: 07/09/19
NODE NAME: SC-NC 450
SHEET #: 8 OF 11

8

DocuSign Envelope ID: 6645CF59-75CE-45EE-92E6-D327D90CBF91

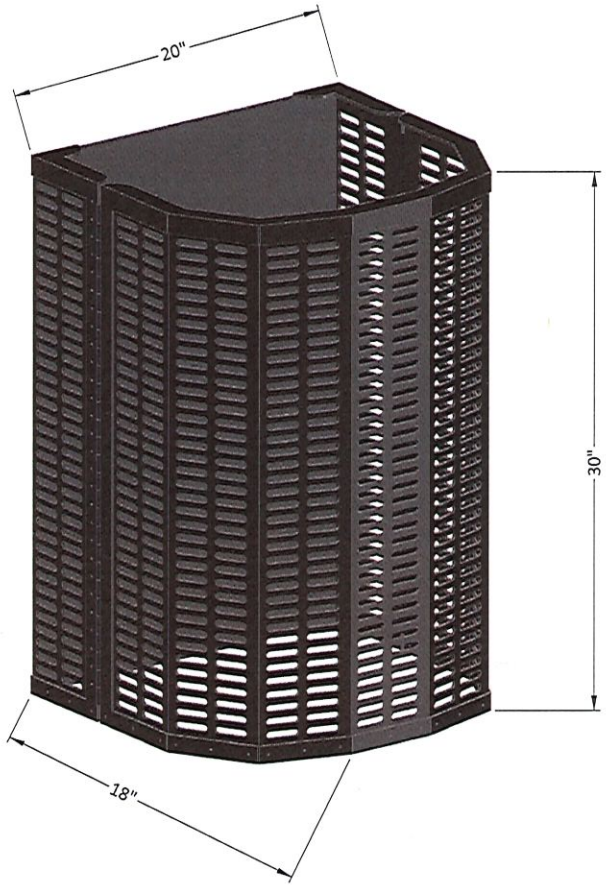

NEW YORK MANUFACTURING RADIO CAGE
CONCEPTUAL VIEW

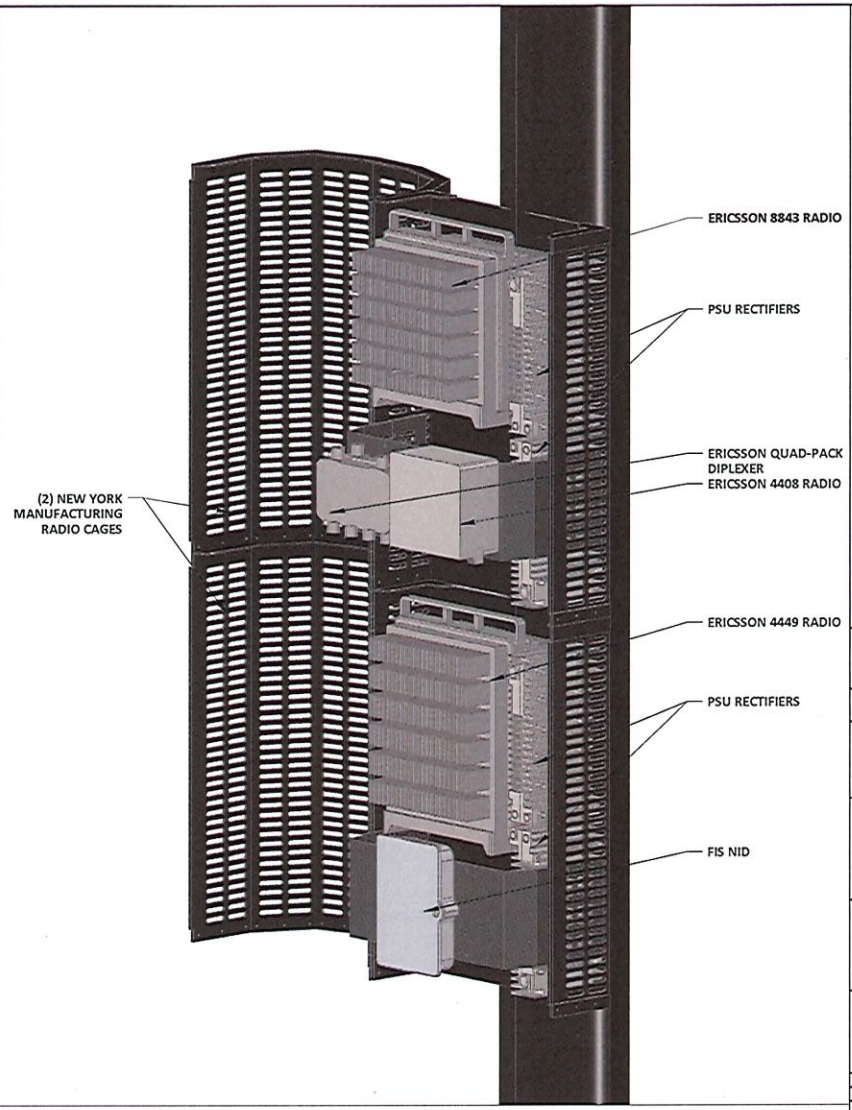

NEW YORK MANUFACTURING RADIO CAGE
EQUIPMENT ARRANGEMENT
ISOMETRIC VIEW

FOR REVIEW ONLY NOT FOR CONSTRUCTION

Paul G. Jones
NORTH CAROLINA PROFESSIONAL SEAL 036434 ENGINEER PAUL G. JONES
6/9/2020

THIS MAP MAY NOT BE A CERTIFIED SURVEY AND HAS NOT BEEN REVIEWED BY A LOCAL GOVERNMENT AGENCY FOR COMPLIANCE WITH ANY APPLICABLE LAND DEVELOPMENT REGULATIONS AND HAS NOT BEEN REVIEWED FOR COMPLIANCE WITH RECORDING REQUIREMENTS FOR PLATS.

LOCATION:
FAYETTEVILLE, NORTH CAROLINA
35.052598°,-78.877948°

POLE OWNER: CROWN CASTLE

NOTES:

PREPARED FOR:
CROWN CASTLE
1500 CORPORATE DRIVE
CANONSBURG, PA 15317

PREPARED BY:
PIKE TELECOM
21 Orchard Rd
Marshfield, MA 02048
www.pikeTelecom.com
1-508-337-7600

CROWN CASTLE SMALL CELL
RADIO CAGE

REVISIONS

REV	DESCRIPTION	DATE
1	REVISED TO REMOVE METER PEDESTAL	04/03/20
2	REVISED TO REMOVE STREETLIGHT	06/05/20

DRAFTER: NB
SCALE: NTS
ISSUE DATE: 07/09/19
NODE NAME: SC-NC 450
SHEET #: 9 OF 11

9

DocuSign Envelope ID: 6645CF59-75CE-45EE-92E6-D327D90CBF91

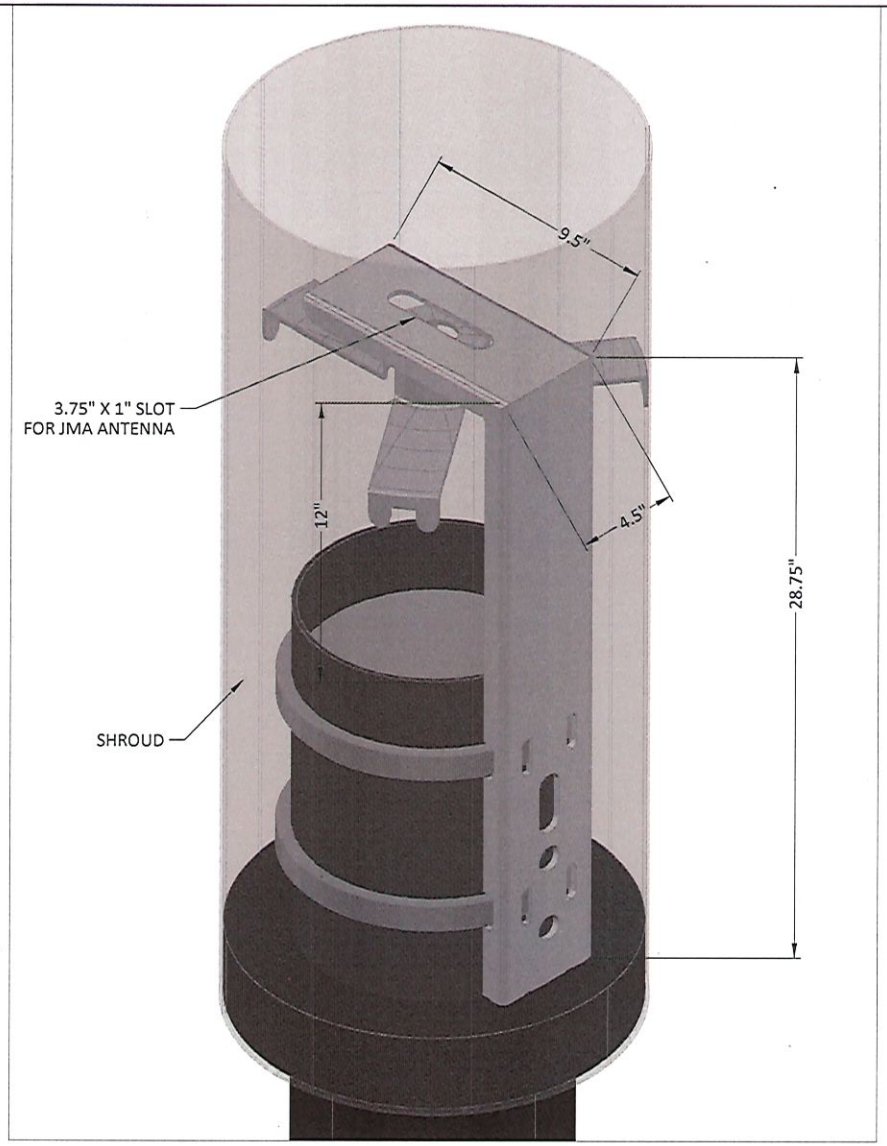

NEW YORK MANUFACTURING TOP POLE BRACKET
WITH SHROUD FOR JMA ANTENNA
CONCEPTUAL VIEW

FOR REVIEW ONLY NOT FOR CONSTRUCTION

NORTH CAROLINA PROFESSIONAL SEAL 036434 ENGINEER PAUL G. JONES
6/9/2020

THIS MAP MAY NOT BE A CERTIFIED SURVEY AND HAS NOT BEEN REVIEWED BY A LOCAL GOVERNMENT AGENCY FOR COMPLIANCE WITH ANY APPLICABLE LAND DEVELOPMENT REGULATIONS AND HAS NOT BEEN REVIEWED FOR COMPLIANCE WITH RECORDING REQUIREMENTS FOR PLATS.

LOCATION:
FAYETTEVILLE, NORTH CAROLINA
35.052598°,-78.877948°

POLE OWNER:
CROWN CASTLE

NOTES:

PREPARED FOR:
CROWN CASTLE
1500 CORPORATE DRIVE
CANONSBURG, PA 15317

PREPARED BY:
PIKE TELECOM
21 Oxford Rd
Mansfield, MA 02048
www.piketelecom.com
1-508-337-7600

MOUNTING BRACKET DETAILS

REVISIONS

REV	DESCRIPTION	DATE
1	REVISED TO REMOVE METER PEDESTAL	04/03/20
2	REVISED TO REMOVE STREETLIGHT	06/05/20

DRAFTER: NB
SCALE: NTS
ISSUE DATE: 07/09/19
NODE NAME: SC-NC 450
SHEET #: 10 OF 11

10

DocuSign Envelope ID: 6645CF59-75CE-45EE-92E6-D327D90CBF91

Pole Num:	Unset	Pole Length / Class:	41 / F	Code:	NESC	Structure Type:	Unguyed Tangent
Aux Data 1	SC-NC 0450	Material:	Concrete	NESC Rule:	Rule 250B	Status	Unguyed
Aux Data 2	Unset	Setting Depth (ft):	6.00	Construction Grade:	C	Pole Strength Factor:	1.00
Aux Data 3	Unset	G/L Circumference (in):	39.73	Loading District:	Medium	Transverse Wind LF:	1.75
Aux Data 4	Unset	--	--	Ice Thickness (in):	0.25	Wire Tension LF:	1.00
Aux Data 5	Unset	--	--	Wind Speed (mph):	39.53	Vertical LF:	1.90
Aux Data 6	Unset	--	--	Wind Pressure (psf):	4.00		
Latitude:	0.000000 Deg	Longitude:			0.000000 Deg	Elevation:	0 Feet

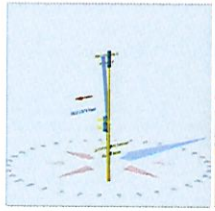

Pole Capacity Utilization (%)		Height (ft)	Wind Angle (deg)
Maximum	10.5	0.0	178.6
Groundline	10.5	0.0	178.6
Vertical	0.2	12.0	178.6

Pole Moments (ft-lb)		Load Angle (deg)	Wind Angle (deg)
Max Cap Util	7,648	178.5	178.6
Groundline	7,648	178.5	178.6
GL Allowable	76,800		

Groundline Load Summary - Reporting Angle Mode: Load - Reporting Angle: 178.5°

	Shear Load* (lbs)	Applied Load (%)	Bending Moment[1] (ft-lb)	Applied Moment (%)	Pole Capacity (%)	Bending Stress (+/- psi)	Vertical Load (lbs)	Vertical Stress (psi)	Total Stress (psi)	Pole Capacity (%)
GenericEquipments	151	43.5	4,109	53.7	5.4	236	811	6	243	5.2
ConcretePoles	196	56.5	3,539	46.3	4.6	204	2,063	16	220	4.7
Pole Load	346	100.0	7,648	100.0	10.0	440	2,874	23	463	10.0
Pole Reserve Capacity			69,152		90.0	4,201			4,179	90.0

Load Summary by Owner - Reporting Angle Mode: Load - Reporting Angle: 178.5°

	Shear Load* (lbs)	Applied Load (%)	Bending Moment (ft-lb)	Applied Moment (%)	Pole Capacity (%)	Bending Stress (+/- psi)	Vertical Load (lbs)	Vertical Stress (psi)	Total Stress (psi)	Pole Capacity (%)
Crown Castle	151	43.5	4,109	53.7	5.4	236	811	6	243	5.2
Pole	196	56.5	3,539	46.3	4.6	204	2,063	16	220	4.7
Totals:	346	100.0	7,648	100.0	10.0	440	2,874	23	463	10.0

Detailed Load Components:

GenericEquipment		Owner	Height (ft)	Horiz. Offset (in)	Offset Angle (deg)	Rotate Angle (deg)	Unit Weight (lbs)	Unit Height (in)	Unit Depth (in)	Unit Diameter (in)	Unit Length (in)	Offset Moment* (ft-lb)	Wind Moment* (ft-lb)	Moment at GL* (ft-lb)
Cylinder	JMA CX160MI236-1C	Crown Castle	38.00	0.01	90.0	0.0	35.00	36.00	--	14.00	--	0	931	931
Cylinder	NYM SHROUD	Crown Castle	35.25	0.23	270.0	0.0	10.00	32.00	--	14.00	--	0	768	768
Box	RADIO CAGE	Crown Castle	15.75	13.94	180.0	0.0	180.00	30.00	18.00	--	20.00	397	735	1,132
Box	RADIO CAGE	Crown Castle	13.25	14.16	180.0	0.0	180.00	30.00	18.00	--	20.00	403	618	1,022
Box	Q01DM10030TRSR Disconnect	Crown Castle	6.58	8.25	90.0	0.0	12.00	14.00	5.00	--	10.00	0	36	36
Box	Electric Meter	Crown Castle	4.00	8.97	90.0	0.0	10.00	12.00	6.00	--	10.00	0	22	23
											Totals:	801	3,110	3,912

Paul G Jones

NORTH CAROLINA PROFESSIONAL SEAL 036434 ENGINEER PAUL G. JONES

6/9/2020

THIS MAP MAY NOT BE A CERTIFIED SURVEY AND HAS NOT BEEN REVIEWED BY A LOCAL GOVERNMENT AGENCY FOR COMPLIANCE WITH ANY APPLICABLE LAND DEVELOPMENT REGULATIONS AND HAS NOT BEEN REVIEWED FOR COMPLIANCE WITH RECORDING REQUIREMENTS FOR PLATS.

LOCATION:
FAYETTEVILLE, NORTH CAROLINA
35.052598°,-78.877948°

POLE OWNER:
CROWN CASTLE

NOTES:

PREPARED FOR:
CROWN CASTLE
1980 CORPORATE DRIVE
CANONSBURG, PA 15317

PREPARED BY:
PIKE TELECOM
21 Oxford Rd
Mansfield, MA 02048
www.pikeTelecom.com
1-508-337-7600

O-CALC

REVISIONS

REV	DESCRIPTION	DATE
1	REVISED TO REMOVE METER PEDESTAL	04/03/20
2	REVISED TO REMOVE STREETLIGHT	06/05/20

DRAFTER: NB
SCALE: NTS
ISSUE DATE: 07/09/19
NODE NAME: SC-NC 450
SHEET #: 11 OF 11

11

FOR REVIEW ONLY NOT FOR CONSTRUCTION